SAMSUNG CONFIDENTIAL
THIS DOCUMENT CONTAINS CONFIDENTIAL
& PROPRIETARY INFORMATION THAT IS
SAMSUNG ELECTRONICS CO'N PROPERTY.
DO NOT DISCLOSE TO OR DUPLICATE FOR OTHERS
EXCEPT AS AUTHORIZED BY SAMSUNG.

SM-A305_SVC

2018.01.24

sheet01 : GSM / WCDMA / LTE RF
sheet02 : TRANCEIVER, DRX
sheet03 : SENSORS, DMB, CONNECTIVITY
sheet04 : LASSEN O +
sheet05 : PMIC(Main,IF), KEY, MOTOR, eMMC, Fingerprint
sheet06 : AUDIO, SD/SIM, SUB FPCB CON
sheet07 : CAMERA, DISPLAY

Samsung Confidential

Engineer:	
Drawn by:	
R&D CHK:	TITLE: A30
DOC CTRL CHK:	Size: A1
MFG ENGR CHK:	
QA CHK:	REV / Drawing Number: / Page: 0

Changed by: user93 | Date Changed: | Time Changed:

SAMSUNG CONFIDENTIAL
THIS DOCUMENT CONTAINS CONFIDENTIAL
& PROPRIETARY INFORMATION THAT IS
SAMSUNG ELECTRONICS CO'S PROPERTY.
DO NOT DISCLOSE TO OR DUPLICATE FOR OTHERS
EXCEPT AS AUTHORIZED BY SAMSUNG.

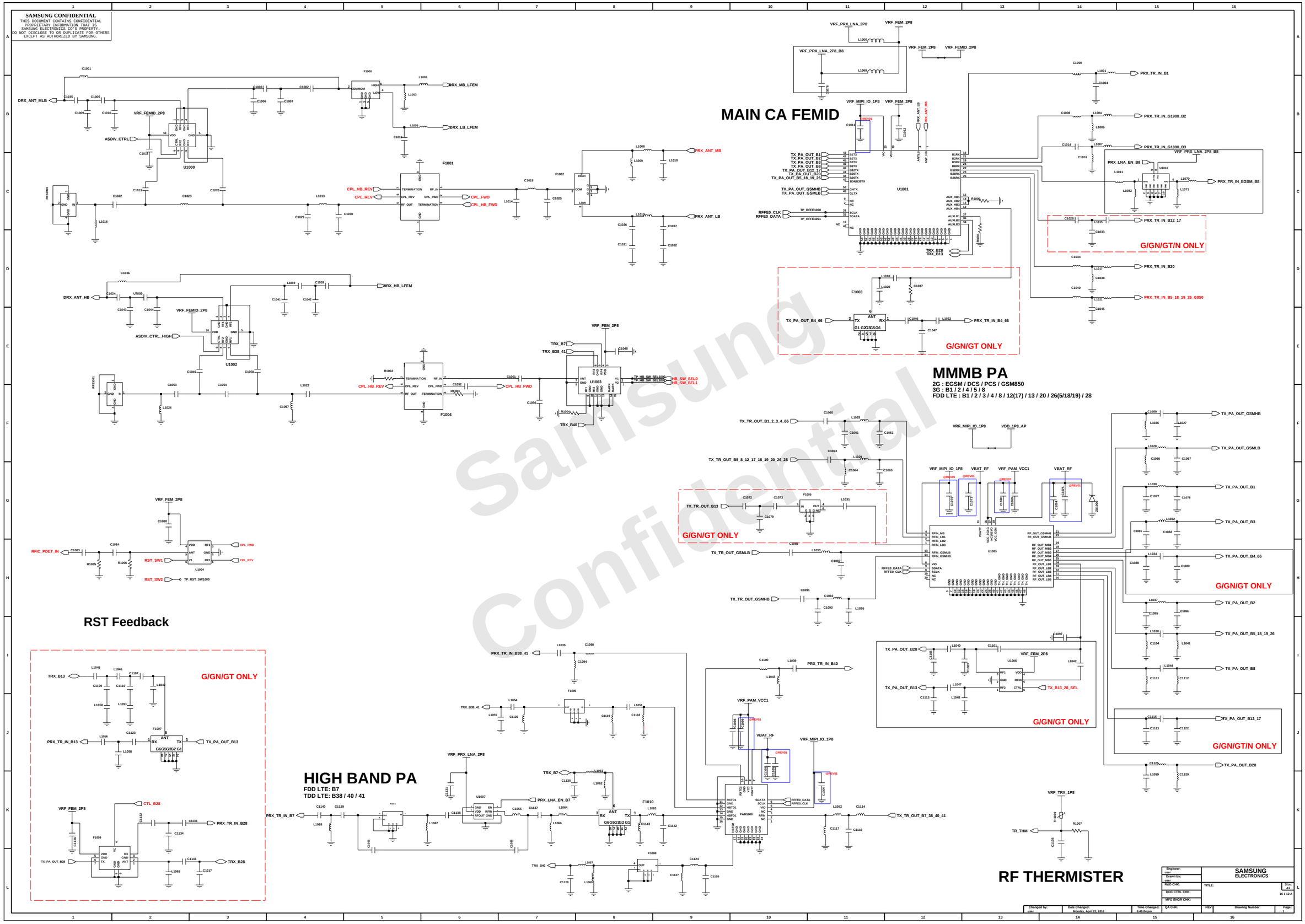

Samsung Confidential

Changed by:	Date Changed:	Time Changed:
user	Monday, April 23, 2018	8:49:04 pm

Engineer: user	SAMSUNG ELECTRONICS	
Drawn by: user		
RAD CHK:	TITLE:	Size: A1
DOC CTRL CHK:		16 1 12 A
MFG ENGR CHK:		
QA CHK:	REV:	Drawing Number: Page: 1

SAMSUNG CONFIDENTIAL
THIS DOCUMENT CONTAINS CONFIDENTIAL
& PROPRIETARY INFORMATION THAT IS
SAMSUNG ELECTRONICS CO'S PROPERTY.
DO NOT DISCLOSE TO OR DUPLICATE FOR OTHERS
EXCEPT AS AUTHORIZED BY SAMSUNG.

DRX

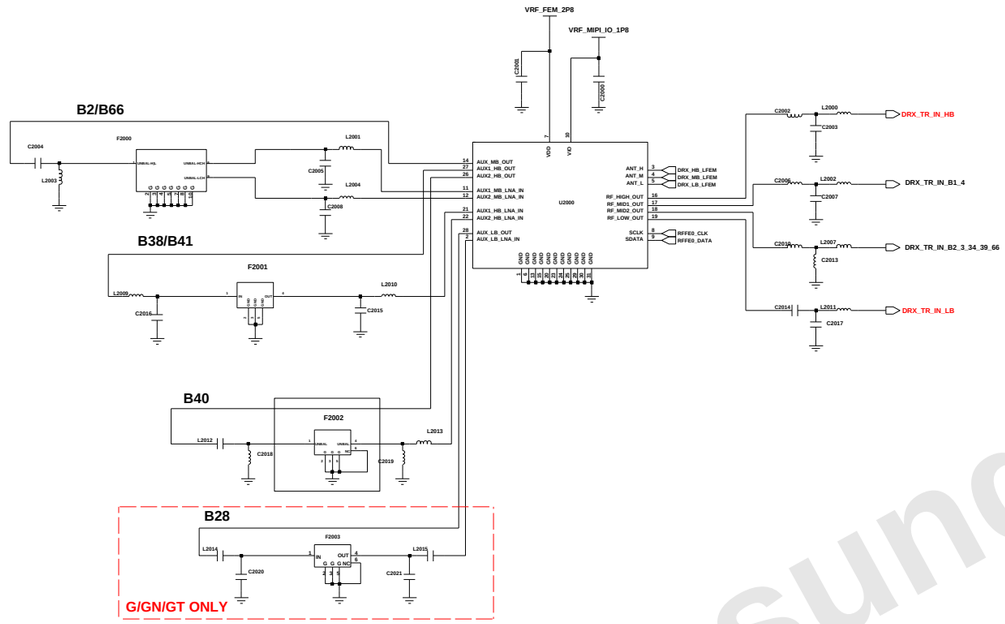

APT MODULATOR

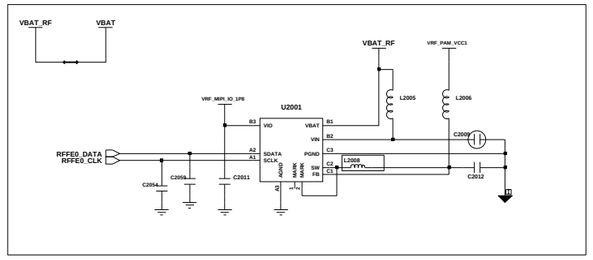

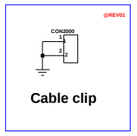

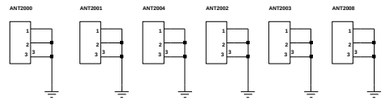

GND

TRANCEIVER

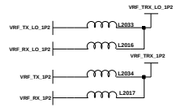

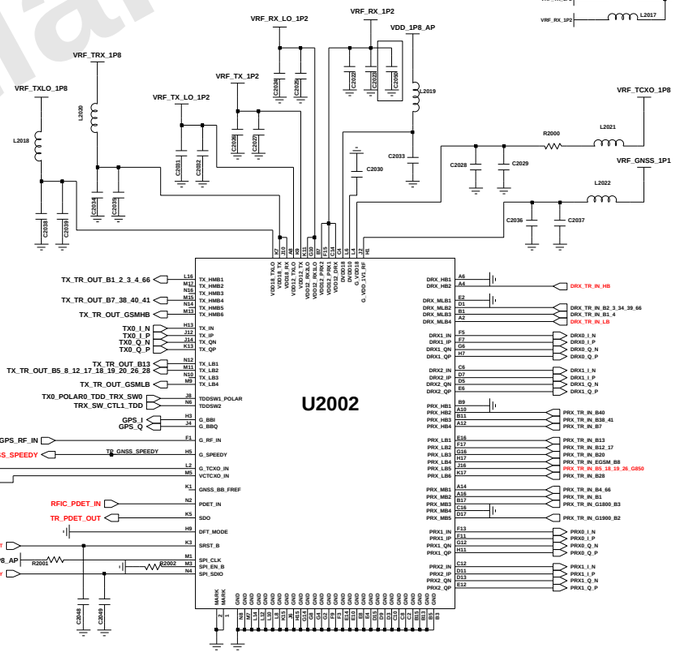

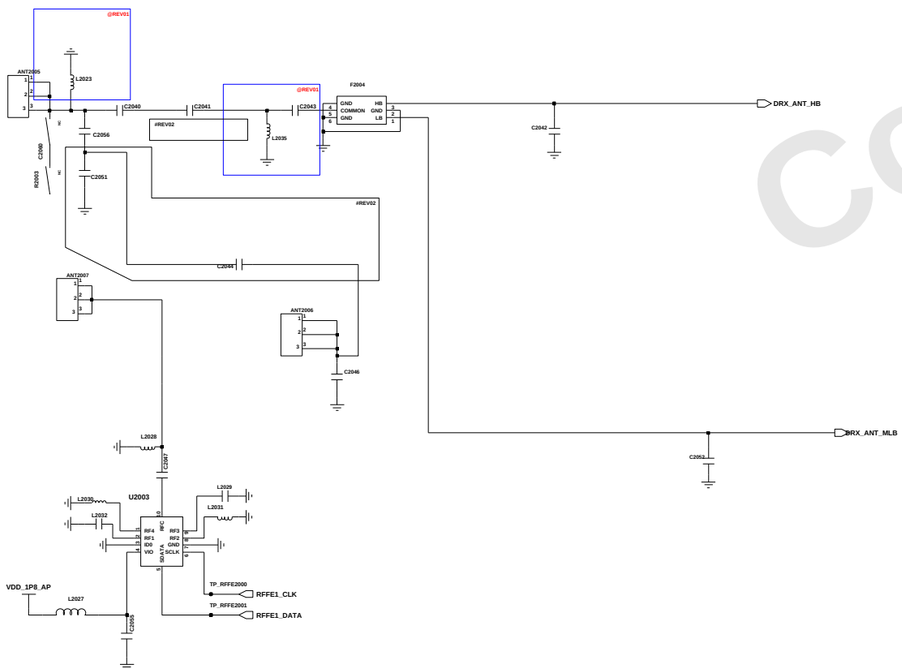

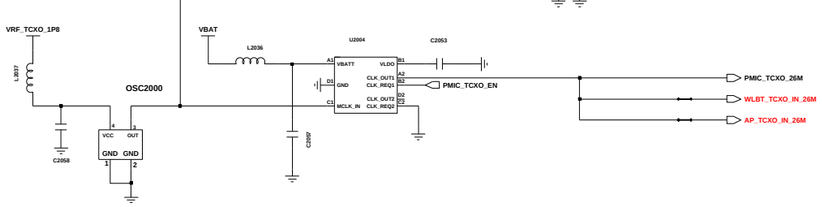

Samsung Confidential

Engineer	DRX, TRANCEIVER
Drawn by:	
R&D CHK:	TITLE: SM-J737P/V/R4
DOC CTRL CHK:	Size: A3
MFG ENGR CHK:	
QA CHK:	Drawing Number 2/7

Changed by:	Date Changed:	Time Changed:

SAMSUNG CONFIDENTIAL
THIS DOCUMENT CONTAINS CONFIDENTIAL PROPRIETARY INFORMATION THAT IS SAMSUNG ELECTRONICS CO'S PROPERTY. DO NOT DISCLOSE TO OR DUPLICATE FOR OTHERS EXCEPT AS AUTHORIZED BY SAMSUNG.

BT/WIFI

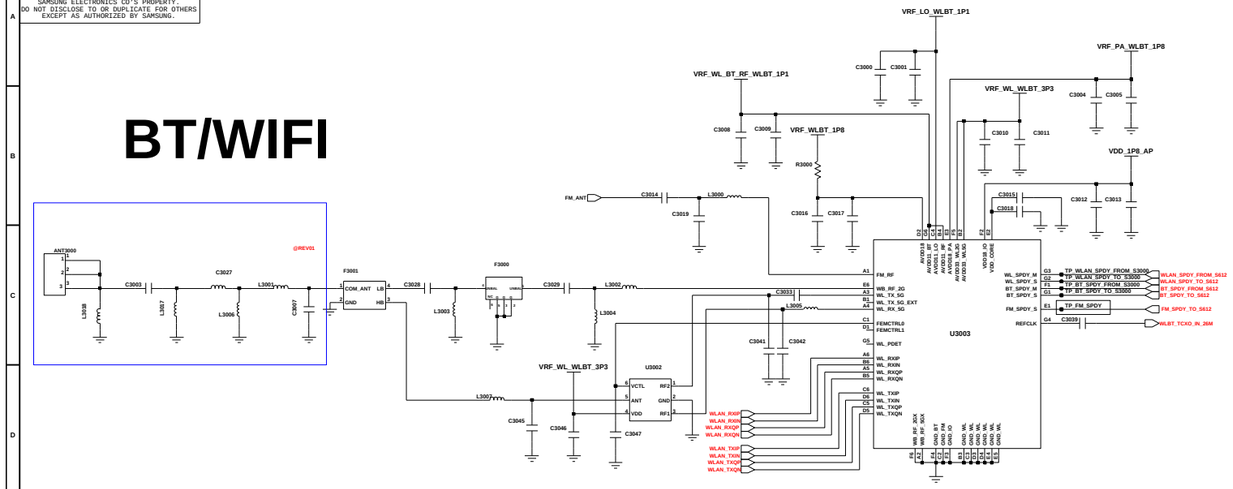

NFC

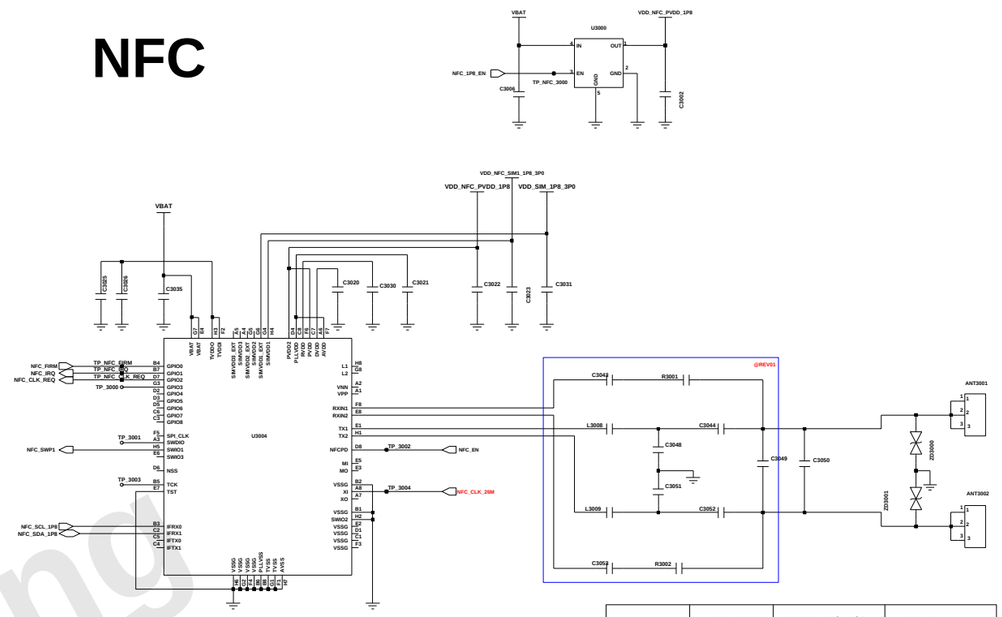

NFC	NFC PART	Power supply of SIM1		NFC GPIO 14	
	U3004	R6001	R6002	R4012	R4013
NFC	CONNECT	short	open	10K ohm	open
nonNFC	NC	open	short	open	10K ohm

GPS

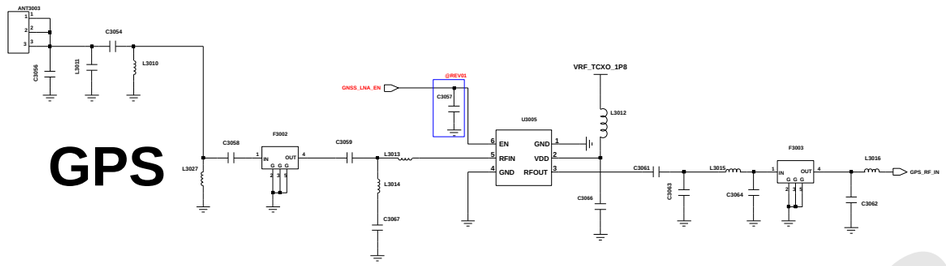

DMB
(for KOR)

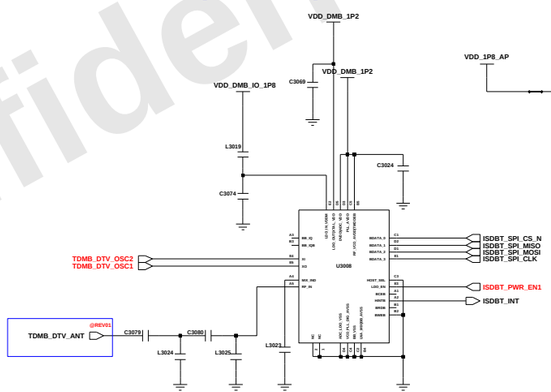

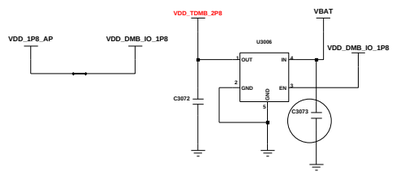

FM/TDMB diplexer Remove

SENSORS

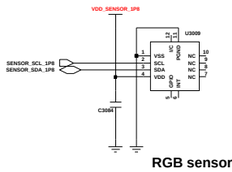

RGB sensor

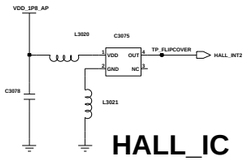

HALL_IC

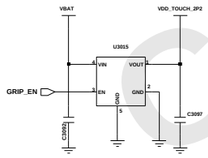

Grip Sensor

DTV

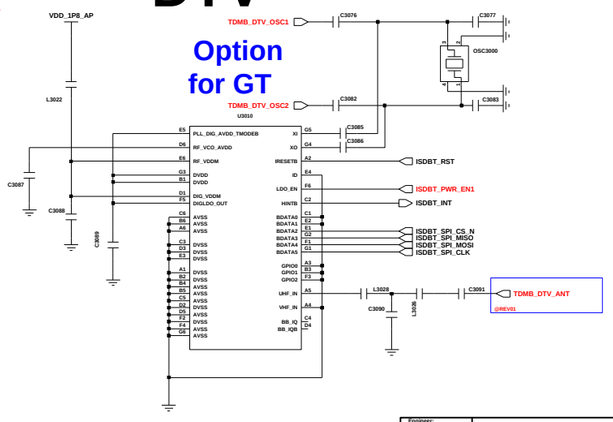

Option for GT

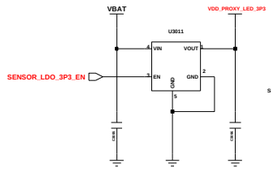

SENSOR LDO

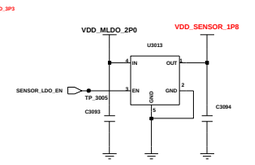

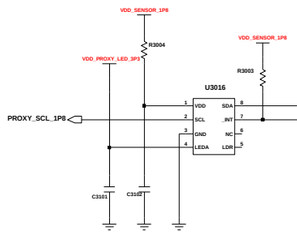

Proxi Sensor

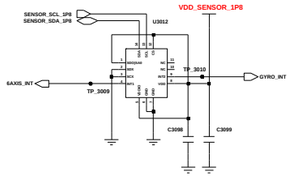

6 AXIS(ACC+GRYO)

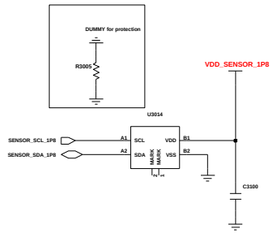

MAGNETIC

Samsung Confidential

Engineer:	SENSOR, WIFI/BT/GPS/NFC
Drawn by:	
R&D CHK:	TITLE: SM-J737P/V/R4
DOC CTRL CHK:	Size: A1
MFG ENGR CHK:	
QA CHK:	REV / Drawing Number: / Page: 3/7

Changed by: user/93 | Date Changed: | Time Changed:

SAMSUNG CONFIDENTIAL
THIS DOCUMENT CONTAINS CONFIDENTIAL
PROPRIETARY INFORMATION THAT IS
SAMSUNG ELECTRONICS CO. LTD. PROPERTY.
DO NOT COPY OR DISTRIBUTE TO OTHERS
EXCEPT AS AUTHORIZED BY SAMSUNG.

EXYNOS7904 (Lassen-O Plus)

POP LP4 4G : SEC

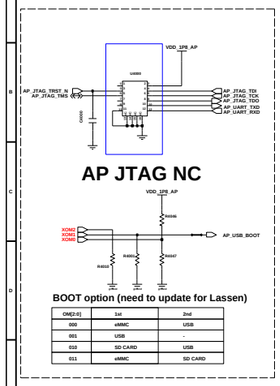

OM[2:0]	1st	2nd
000	eMMC	USB
001	USB	-
010	SD CARD	USB
011	eMMC	SD CARD

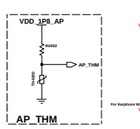

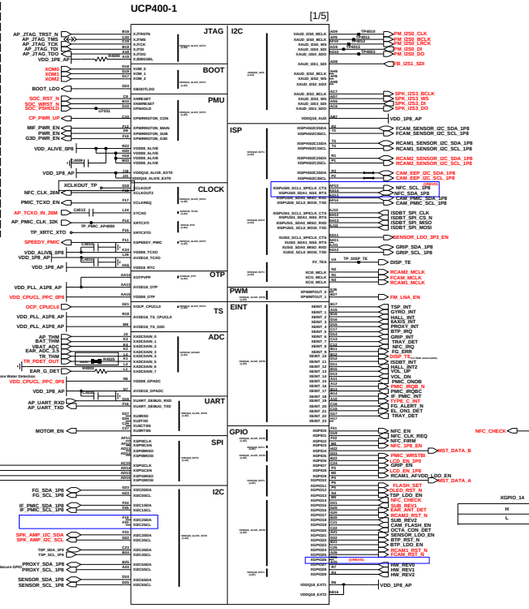

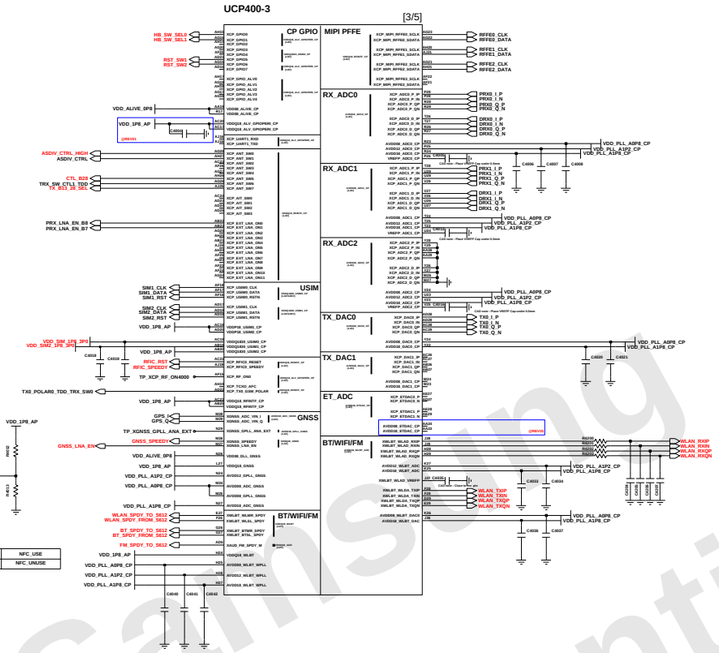

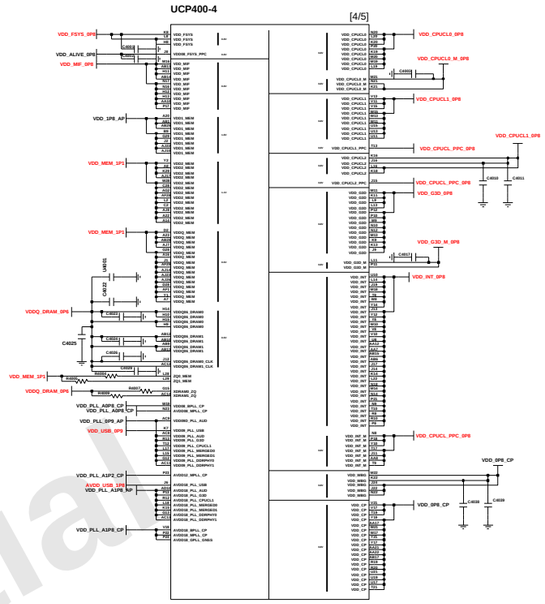

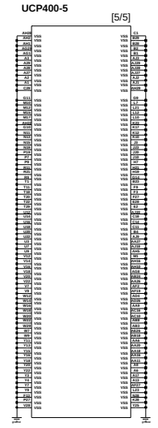

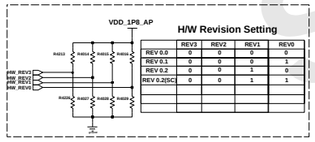

	REV3	REV2	REV1	REV0
REV 0.0	0	0	0	0
REV 0.1	0	0	0	1
REV 0.2	0	0	1	0
REV 0.2[SC]	0	0	1	1

I2C Pull-up Register

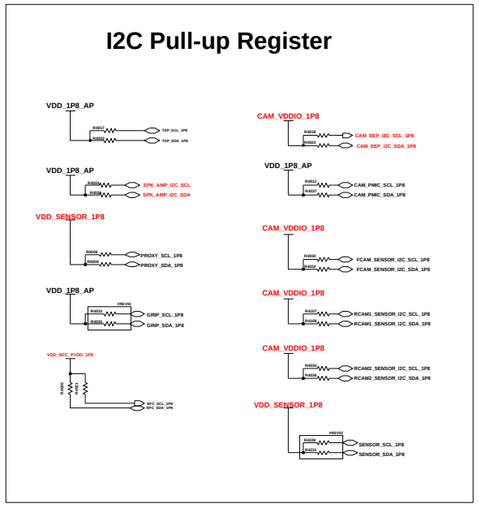

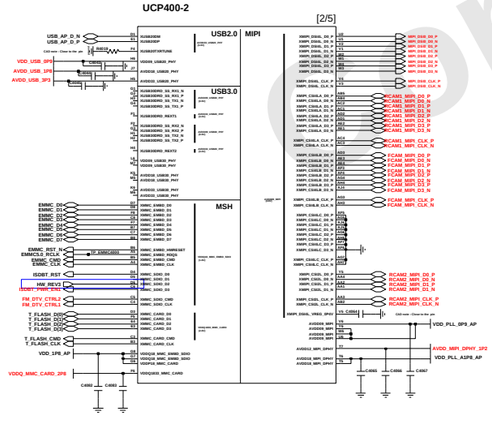

AP Decap

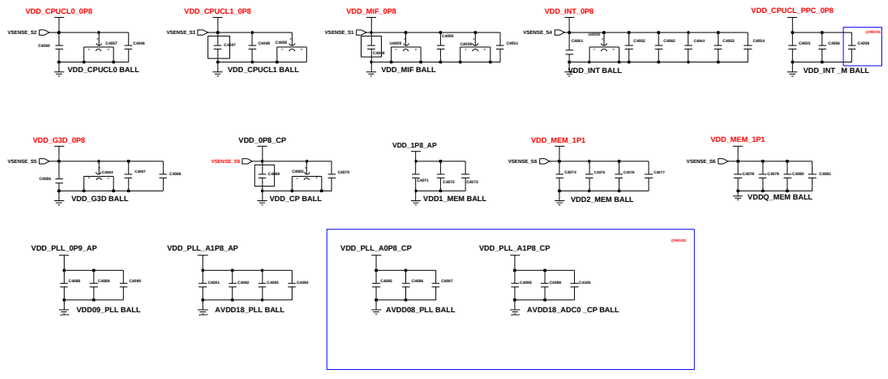

PCB JTAG

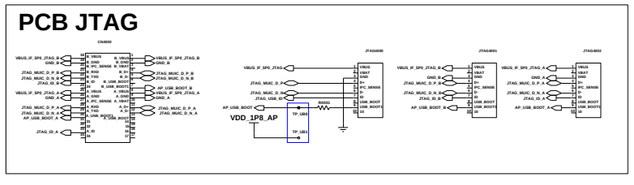

Engineer:	AP
Drawn by:	
REV Code:	TITLE: 2019_J9
DOC CTRL Code:	
MFG BOOK Code:	

Changed by:	Date Changed:	View Changed:	QA Code:	REV:	Drawing Number:	Page: 1/1

Samsung Confidential

SAMSUNG CONFIDENTIAL
THIS DOCUMENT CONTAINS CONFIDENTIAL PROPRIETARY INFORMATION THAT IS SAMSUNG ELECTRONICS CO. PROPERTY. DO NOT COPY OR DISTRIBUTE TO ANYONE OTHERS EXCEPT AS AUTHORIZED BY SAMSUNG.

MAIN_PMIC

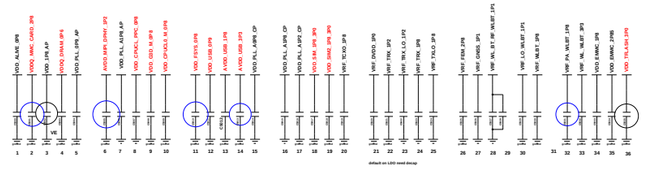

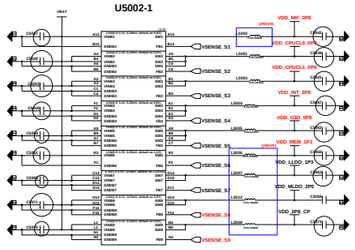

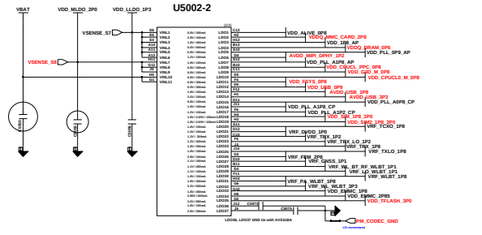

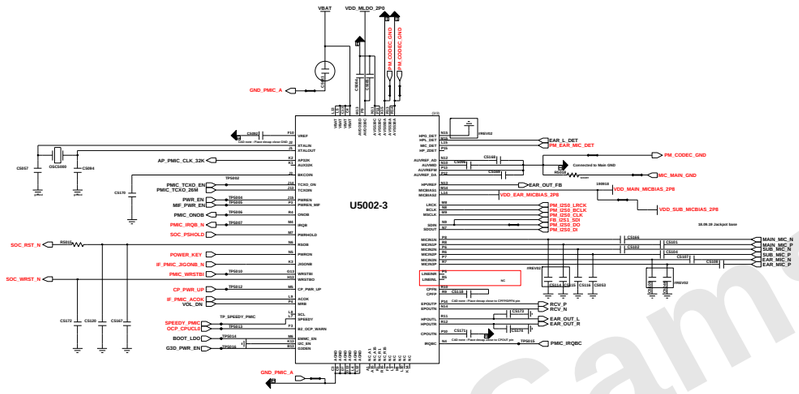

IF_PMIC

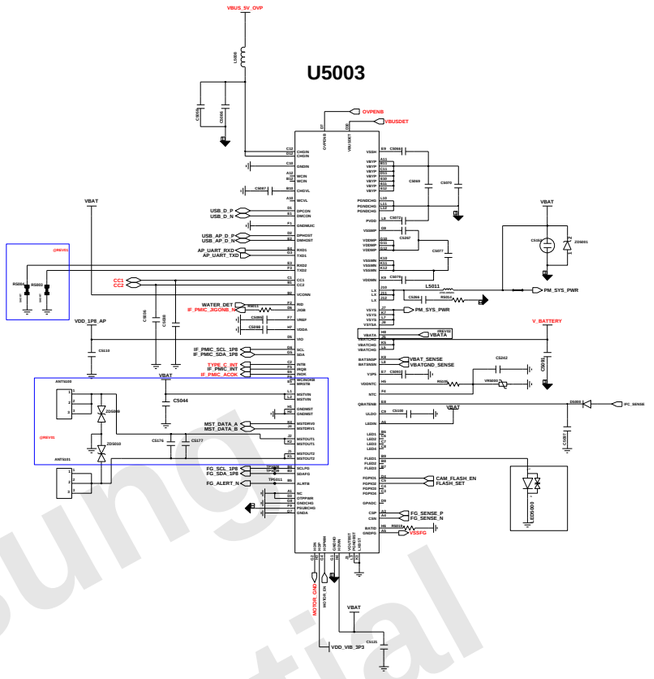

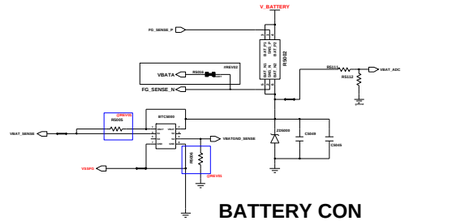

BATTERY CON

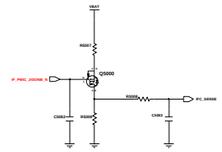

IF PMIC(S2MU106)

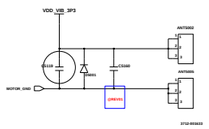

MOTOR

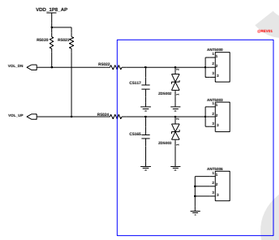

VOLUME KEY

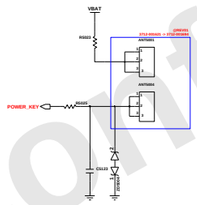

POWER KEY

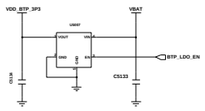

FPS PWR

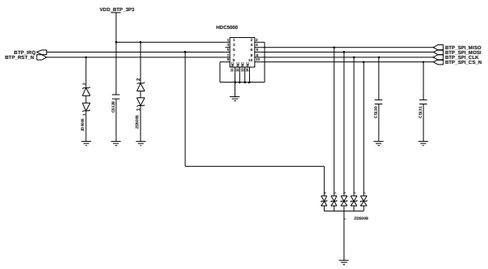

Finger Print Sensor

64GB eMMC 5.1

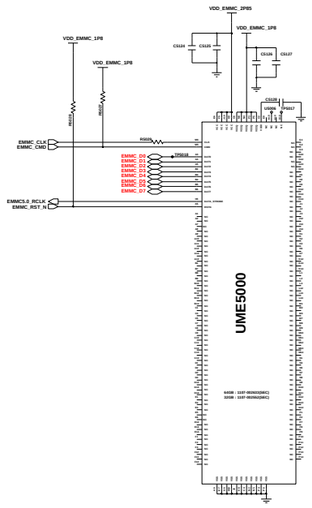

Engineer:	PMIC/IF PMIC/eMMC
Author by:	
REV CHG:	TITLE: 2019_J9
DOC CTRL CHG:	
SPEC ISSUE CHG:	
QA CHG:	REV: Drawing Number: PMIC-IF-1

Changed by: Date Changed: Time Changed:

Samsung Confidential

user|swcad51|10.253.20.69|20190208-173956

SAMSUNG CONFIDENTIAL
THIS DOCUMENT CONTAINS CONFIDENTIAL & PROPRIETARY INFORMATION PROPERTY OF SAMSUNG ELECTRONICS CO'R PROPERTY. DO NOT DISCLOSE TO OR DUPLICATE FOR OTHERS EXCEPT AS AUTHORIZED BY SAMSUNG.

AUDIO

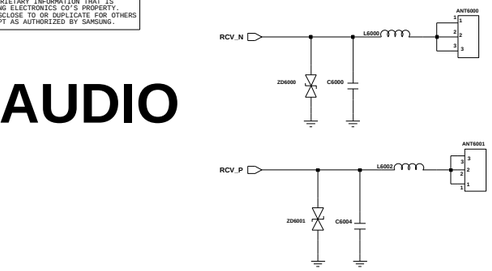

RCV CONTACT

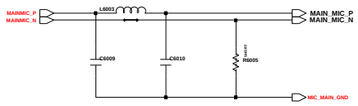

NEAR TO CODEC
GND_ISOLATION

MAIN MIC

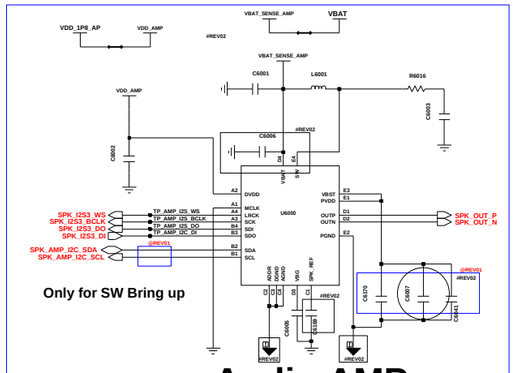

Audio AMP

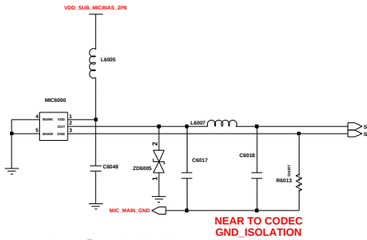

NEAR TO CODEC
GND_ISOLATION

Sub MIC

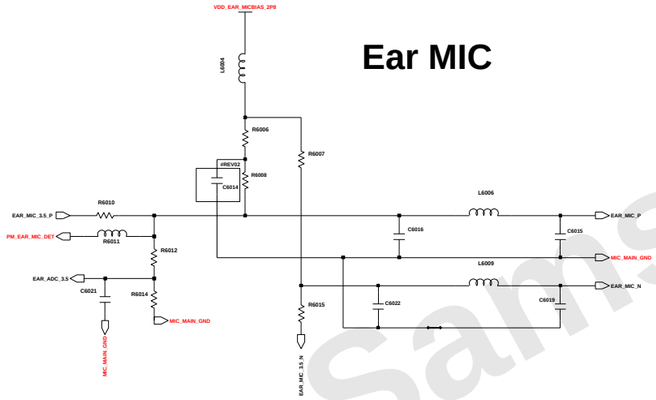

Ear MIC

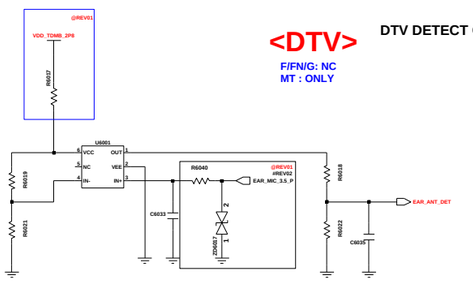

<DTV>

F/FN/G: NC
MT : ONLY

DTV DETECT OPEN

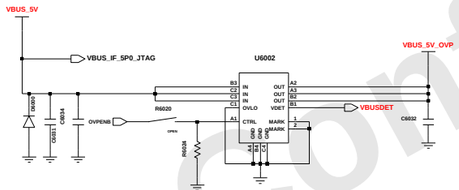

MAIN FPCB

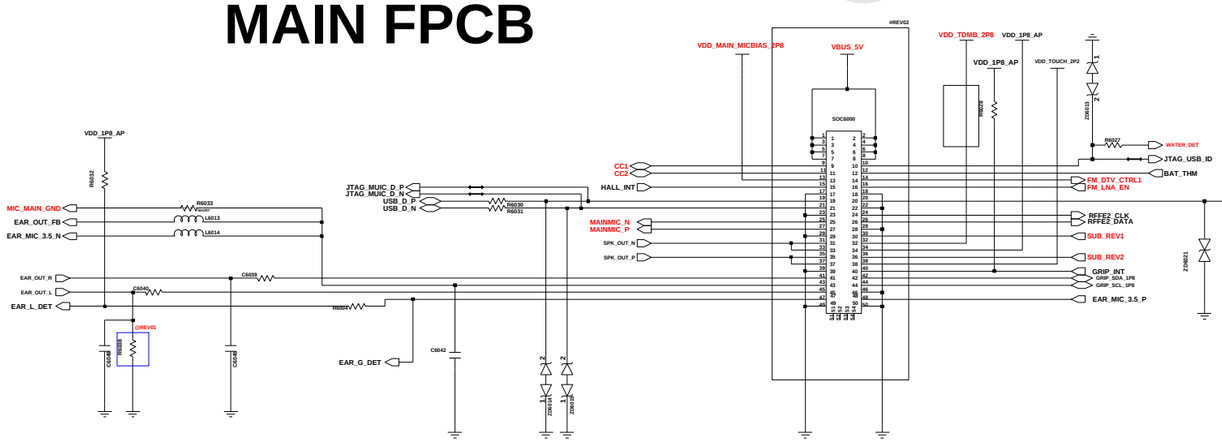

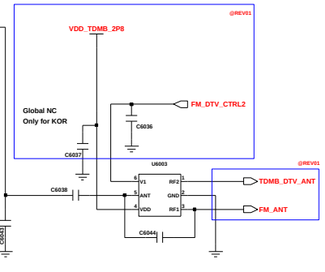

SIM & SD CARD (3IN3)

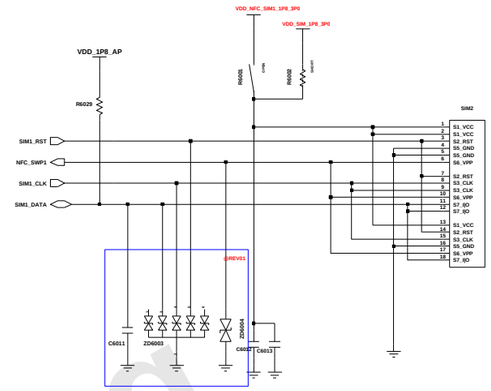

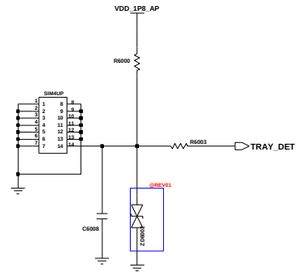

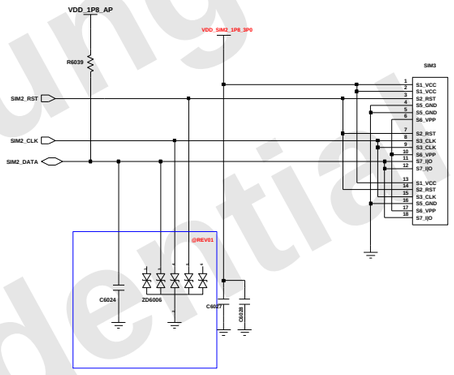

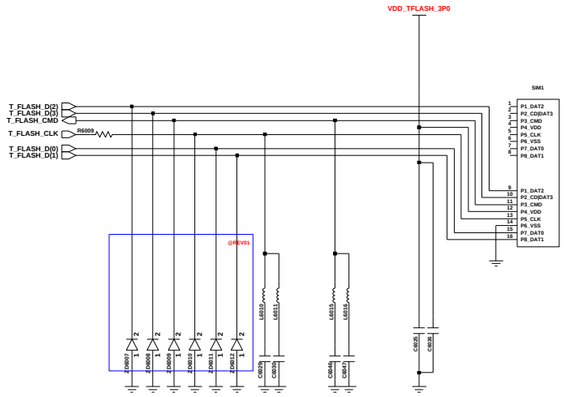

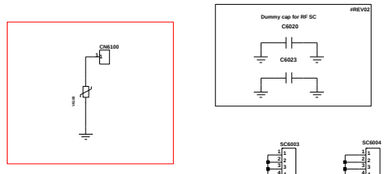

SHIELD CAN

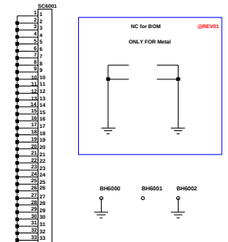

BOSS HOLE

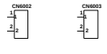

2D BARCODE

F(Global) R6034 SHORT
G(LA) R6035 NC
GT(LA DTV) R6036 NC
N(KOR/NFC) R6023 NC
ETC1 R6037 NC

	F (Global)	G (LA)	N (KOR)	FN	GN	GT	ETC1	
R6034	O			O				
R6035		O			O			
R6023			O	O	O			
R6036						O		
R6037								

Changed by:	Date Changed:	Time Changed:	

Engineer:	AUDIO, SIM/SD, SHIELD CAN		
Drawn by:			
R&D CHK:	TITLE:	Size: A3	
DOC CTRL CHK:			
MFG ENGR CHK:			
QA CHK:	REV	Drawing Number:	Page: 6/7

Samsung Confidential

SAMSUNG CONFIDENTIAL
THIS DOCUMENT CONTAINS CONFIDENTIAL
& PROPRIETARY INFORMATION THAT IS
SAMSUNG ELECTRONICS CO'S PROPERTY.
DO NOT DISCLOSE TO OR DUPLICATE FOR OTHERS
EXCEPT AS AUTHORIZED BY SAMSUNG.

CAMERA_PART

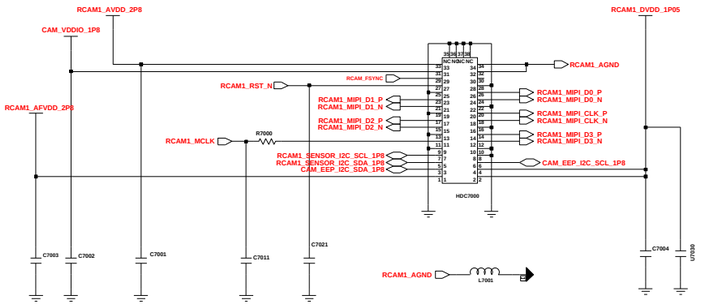

RCAM1_16M CAMERA(34PIN)

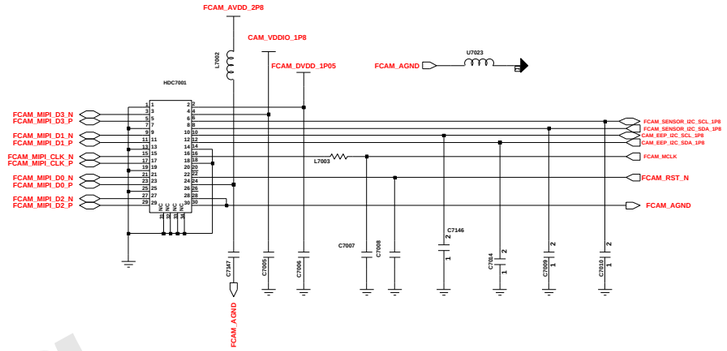

FRONT_16M CAMERA(30PIN)

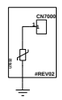

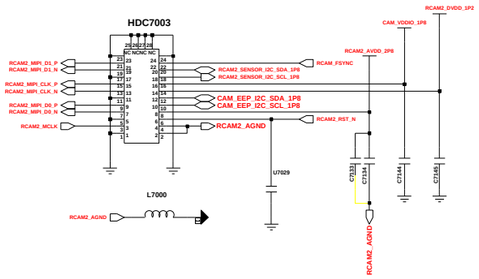

RCAM2_5M CAMERA(24PIN)_S5K5E9

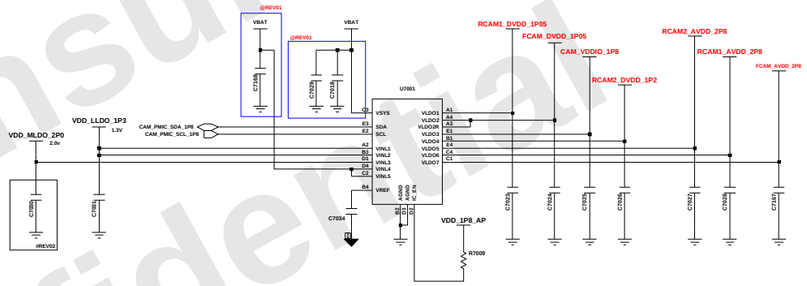

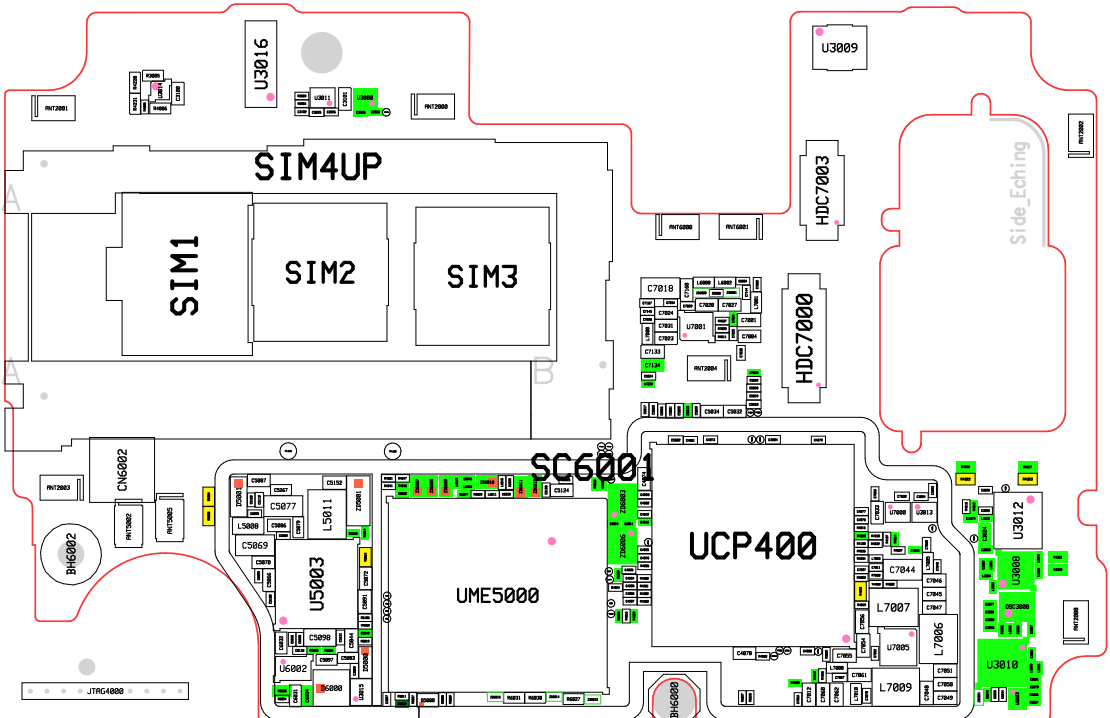
U3016
U3009
SIM4UP
SIM1
SIM2
SIM3
HDC7003
HDC7000
Side_Eching
SC6001
UCP400
UME5000
U5003
CN6002
BH6002
U3012
U3008
U3010
L7007
L7006
L7009
U7001
C7018
C7044
C5077
C5069
L5011
L5008
C5098
U6002
U6000
JTAG4000

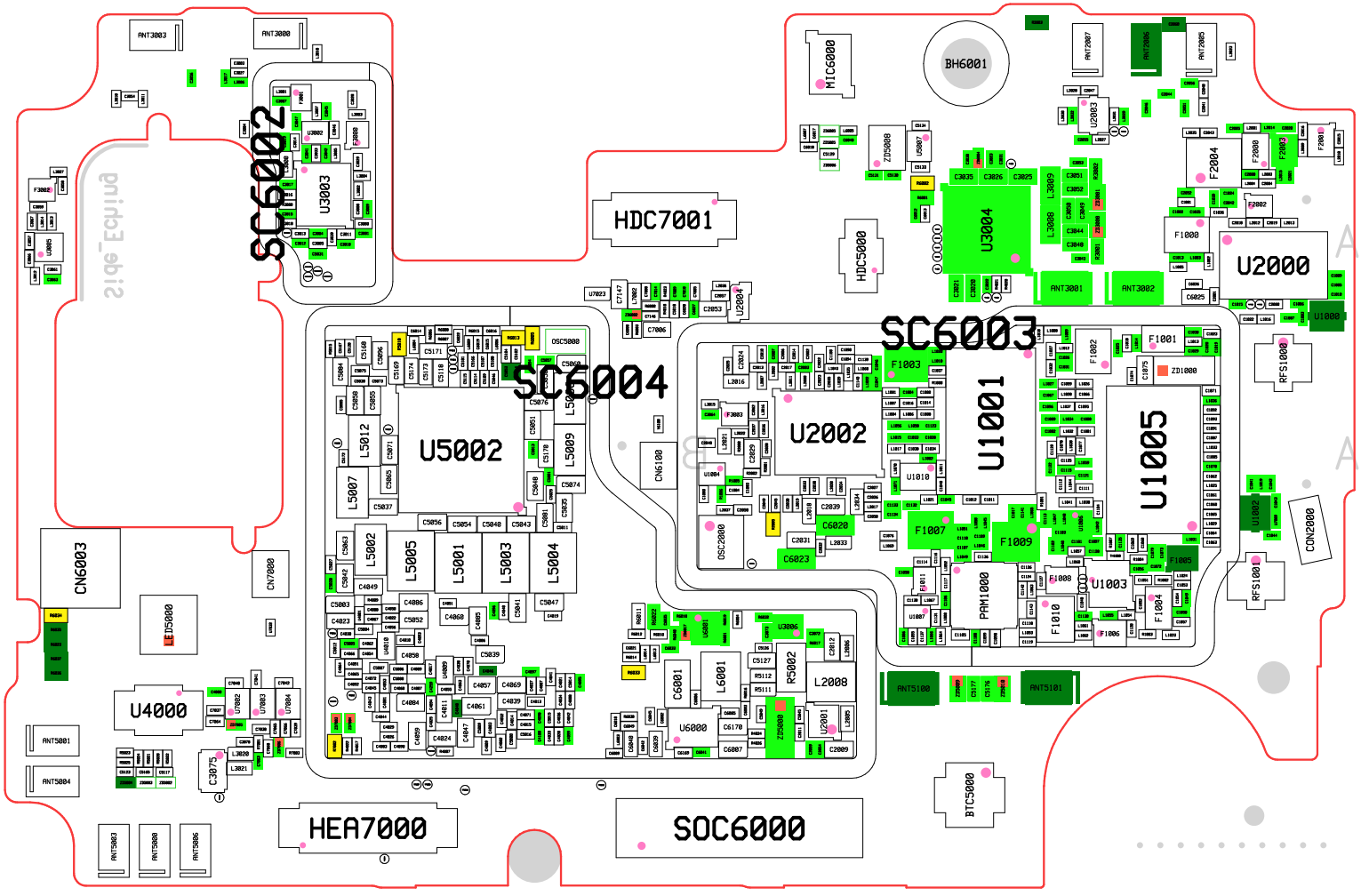
SC6002
U3003
ANT3003
ANT3000
HDC7001
MIC6000
BH6001
ANT2007
ANT2006
ANT2005
U2003
ZD5008
U5007
U3004
HDC5000
F2004
F2000
F2003
F2001
F2002
F1000
U2000
ANT3001
ANT3002
C6025
U1000
SC6003
SC6004
U5002
OSC5000
L5012
L5007
L5009
L5002
L5005
L5001
L5003
L5004
CN6100
U2002
U1001
U1005
F1003
F1001
F1002
C1075
ZD1000
RFS1000
OSC2000
U1010
F1007
F1009
PAM1000
U1003
F1008
F1010
F1006
F1005
F1004
U1002
CON2000
RFS1001
CN6003
CN7000
LED5000
U4000
ANT5001
ANT5004
C3075
L3021
ANT5100
ANT5101
BTC5000
HEA7000
SOC6000
ANT5003
ANT5008
ANT5006
C6001
L6001
U6000
R5002
L2008
U2001
U3006
U6001
C6170
C6007
C2009

SAMSUNG CONFIDENTIAL
THIS DOCUMENT CONTAINS CONFIDENTIAL
& PROPRIETARY INFORMATION WHICH IS
SAMSUNG ELECTRONICS CO'N PROPERTY.
DO NOT DISCLOSE TO OR DUPLICATE FOR OTHERS
EXCEPT AS AUTHORIZED BY SAMSUNG.

SM-A305YN_SVC

2019.03.19

Samsung Confidential

sheet01 : GSM / WCDMA / LTE RF
sheet02 : TRANCEIVER, DRX
sheet03 : SENSORS, DMB, CONNECTIVITY
sheet04 : LASSEN O +
sheet05 : PMIC(Main,IF), KEY, MOTOR, eMMC, Fingerprint
sheet06 : AUDIO, SD/SIM, SUB FPCB CON
sheet07 : CAMERA, DISPLAY

Engineer:			
Drawn by:			
R&D CHK:	TITLE:		Size: A1
DOC CTRL CHK:	A30		
MFG ENGR CHK:			
QA CHK:	REV	Drawing Number:	Page: 0

Changed by: user93 | Date Changed: | Time Changed:

user|swcad51|10.253.20.69|20190329-134228

SAMSUNG CONFIDENTIAL
THIS DOCUMENT CONTAINS CONFIDENTIAL
& PROPRIETARY INFORMATION THAT IS
SAMSUNG ELECTRONICS CO'S PROPERTY.
DO NOT DISCLOSE TO OR DUPLICATE FOR OTHERS
EXCEPT AS AUTHORIZED BY SAMSUNG.

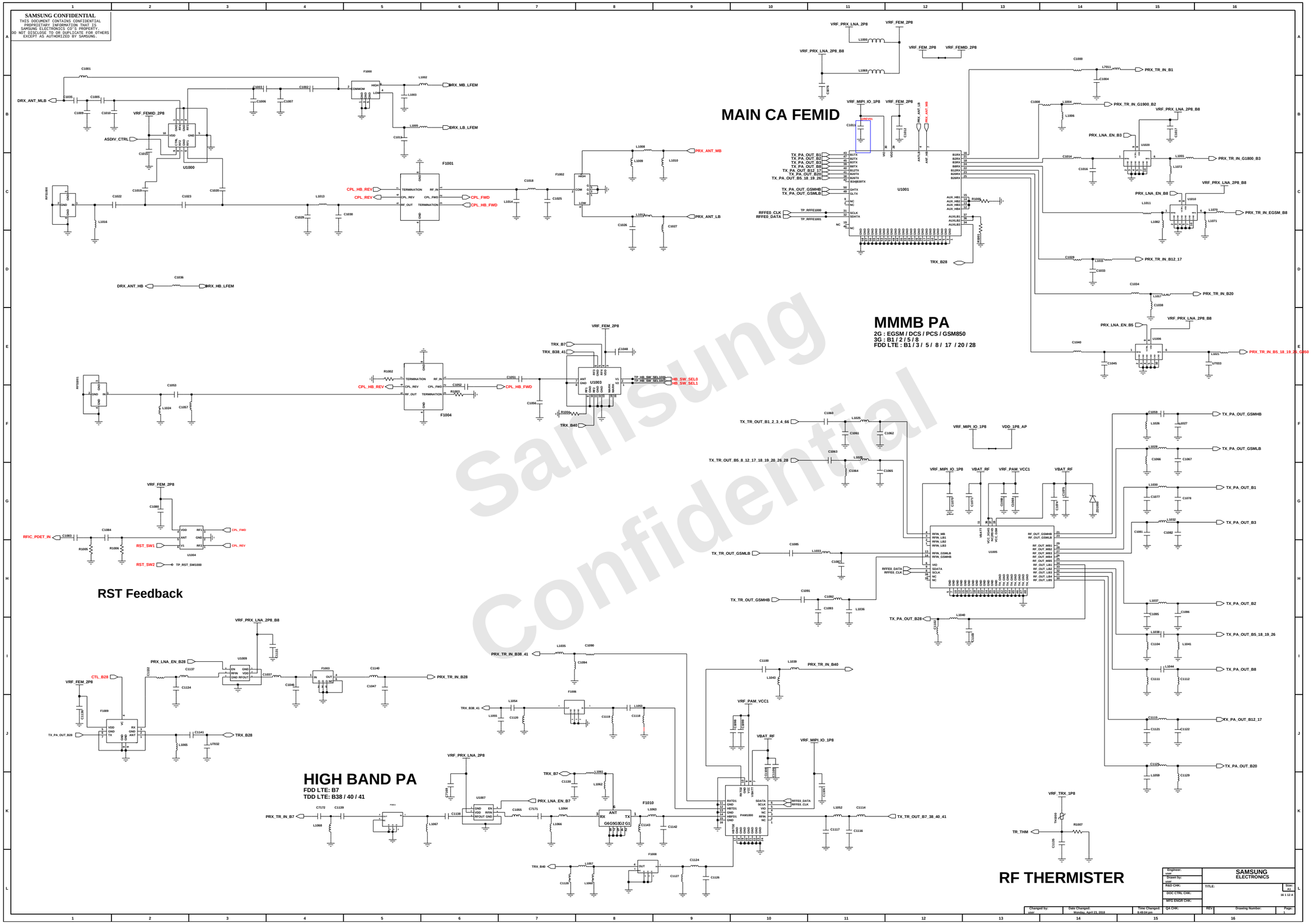

Samsung Confidential

Changed by:	Date Changed:	Time Changed:
user	Monday, April 23, 2018	8:49:04 pm

Engineer: user	SAMSUNG ELECTRONICS	
Drawn by: user		
RAD CHK:	TITLE:	Size: A1
DOC CTRL CHK:		16 1 12 A
MFG ENGR CHK:		
QA CHK:	REV	Drawing Number:
		Page: 1

SAMSUNG CONFIDENTIAL
THIS DOCUMENT CONTAINS CONFIDENTIAL
& PROPRIETARY INFORMATION THAT IS
SAMSUNG ELECTRONICS CO'S PROPERTY.
DO NOT DISCLOSE TO OR DUPLICATE FOR OTHERS
EXCEPT AS AUTHORIZED BY SAMSUNG.

DRX

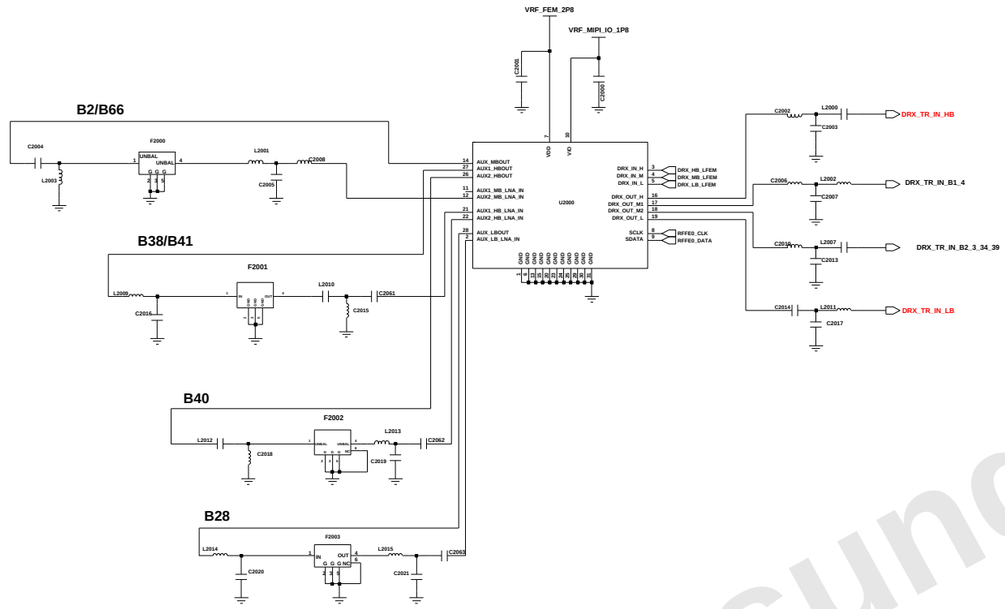

APT MODULATOR

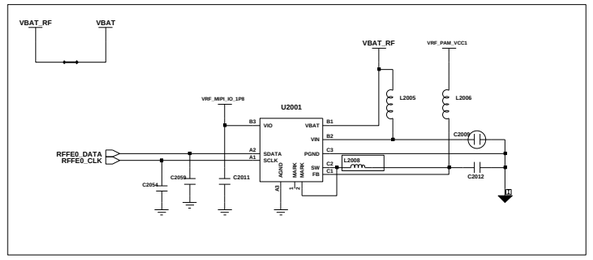

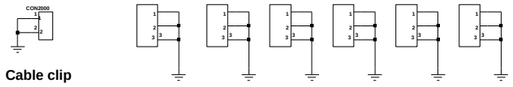

GND

TRANCEIVER

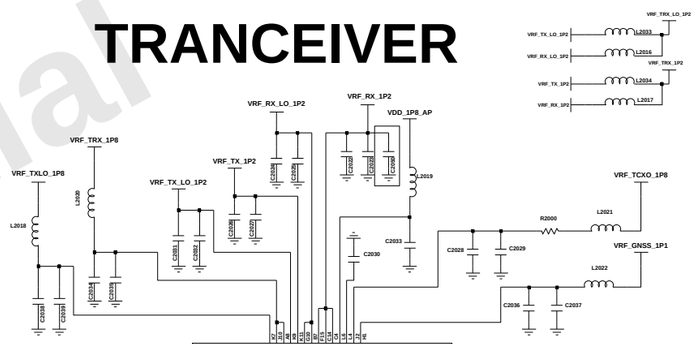

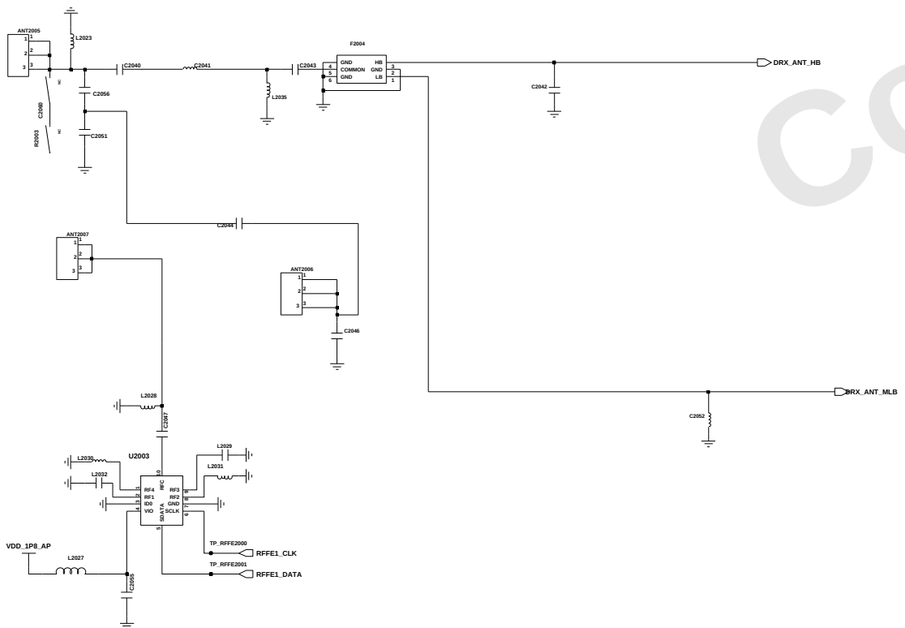

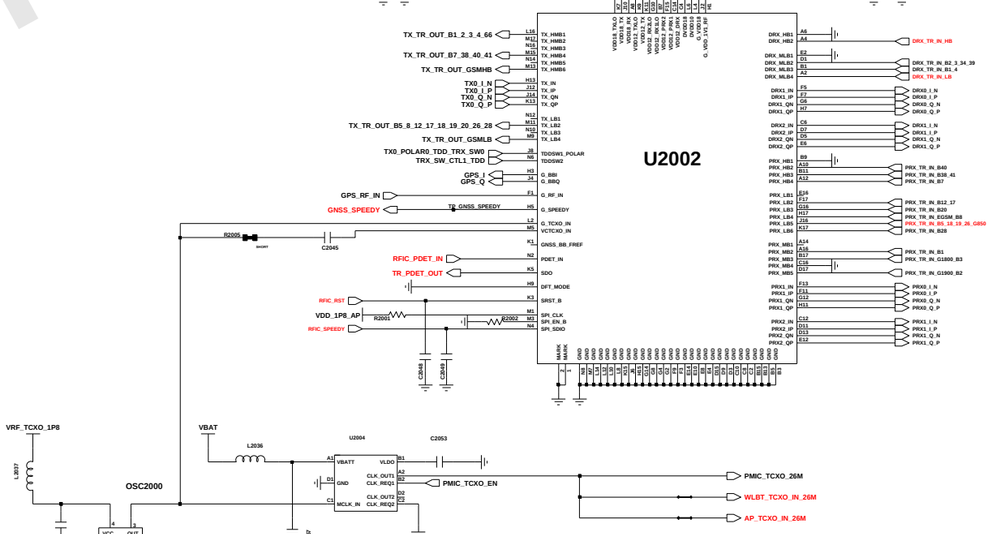

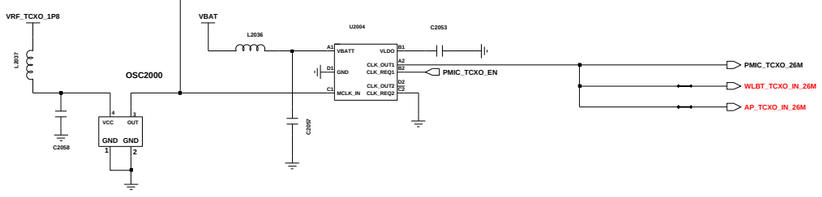

Samsung Confidential

Engineer	DRX, TRANCEIVER
Drawn by:	
R&D CHK:	TITLE: SM-J737P/V/R4
DOC CTRL CHK:	Size: A3
MFG ENGR CHK:	
QA CHK:	Drawing Number 2/7

Changed by: | Date Changed: | Time Changed:

SAMSUNG CONFIDENTIAL
THIS DOCUMENT CONTAINS CONFIDENTIAL PROPRIETARY INFORMATION THAT IS SAMSUNG ELECTRONICS CO'S PROPERTY. DO NOT DISCLOSE TO OR DUPLICATE FOR OTHERS EXCEPT AS AUTHORIZED BY SAMSUNG.

BT/WIFI

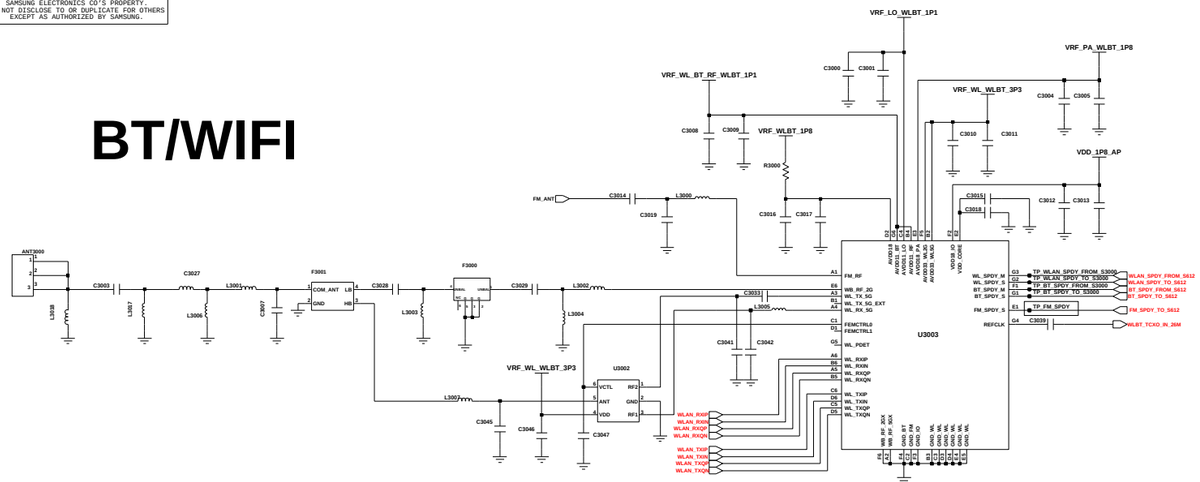

NFC

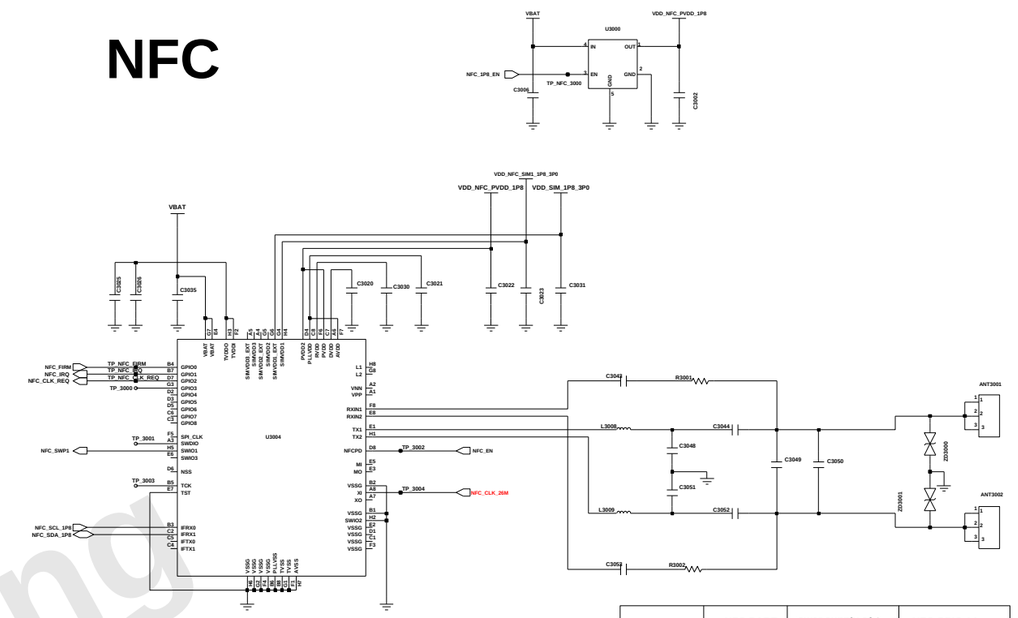

NFC	NFC PART	Power supply of SIM1		NFC GPIO 14	
	U3004	R6001	R6002	R4012	R4013
NFC	CONNECT	short	open	10K ohm	open
nonNFC	NC	open	short	open	10K ohm

GPS

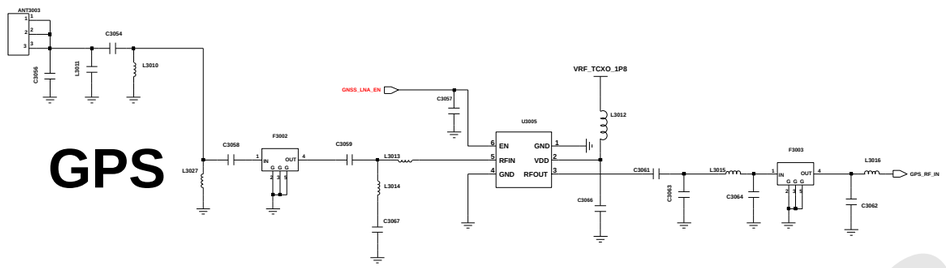

SENSORS

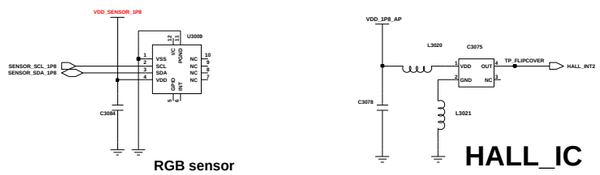

RGB sensor

HALL_IC

Grip Sensor

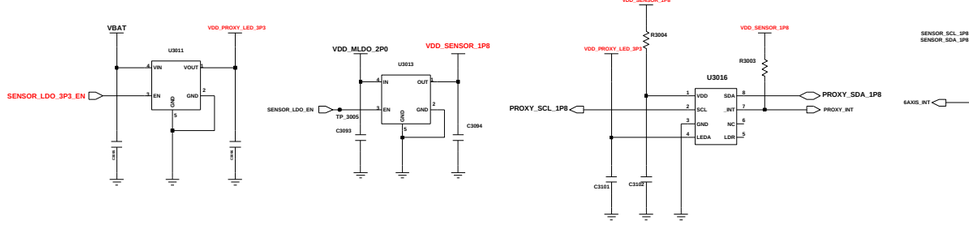

SENSOR LDO

Proxi Sensor

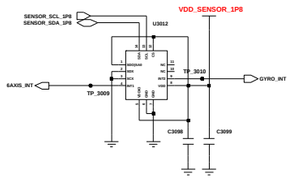

6 AXIS(ACC+GRYO)

DMB
(for KOR)

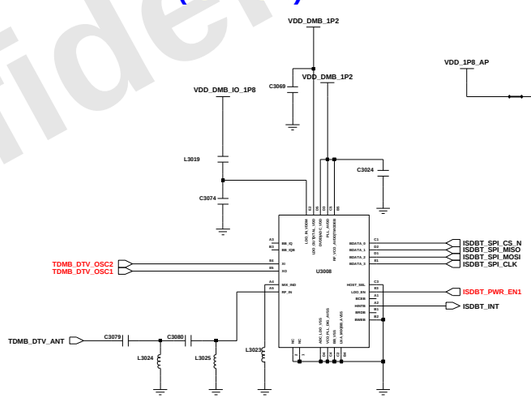

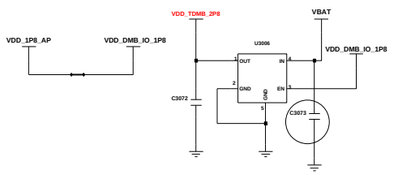

DTV
Option for GT

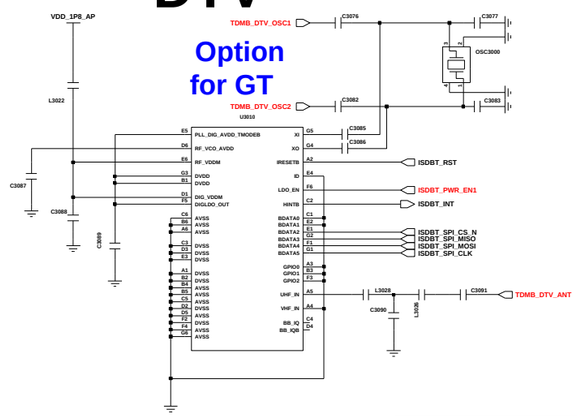

MAGNETIC

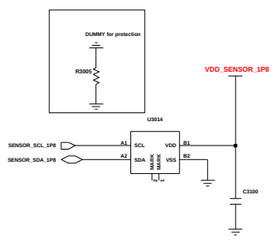

Engineer:	SENSOR, WIFI/BT/GPS/NFC
Drawn by:	
R&D CHK:	TITLE: SM-J737P/V/R4
DOC CTRL CHK:	Size: A1
MFG ENGR CHK:	
QA CHK:	REV: Drawing Number: Page: 3/7

Changed by: user/83 | Date Changed: | Time Changed:

Samsung Confidential

SAMSUNG CONFIDENTIAL
THIS DOCUMENT CONTAINS CONFIDENTIAL
PROPRIETARY INFORMATION THAT IS
SAMSUNG ELECTRONICS CO. LTD. PROPERTY.
DO NOT COPY OR DISTRIBUTE TO THE OTHERS
EXCEPT AS AUTHORIZED BY SAMSUNG.

EXYNOS7904 (Lassen-O Plus)

POP LP4 4G : SEC

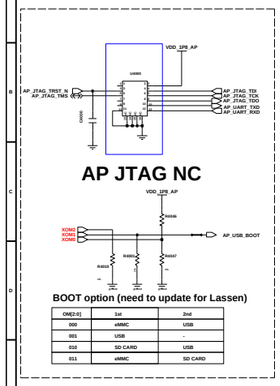

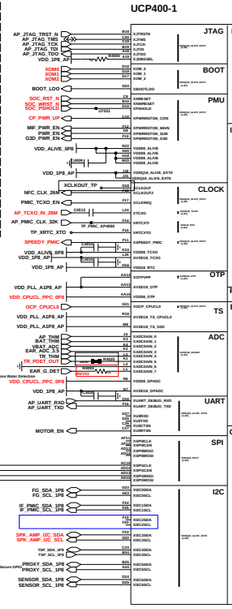

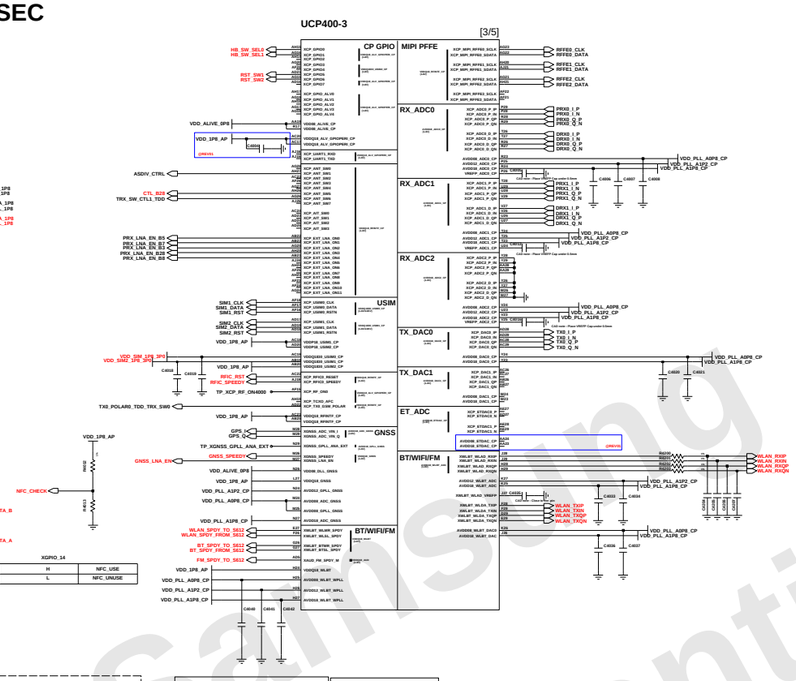

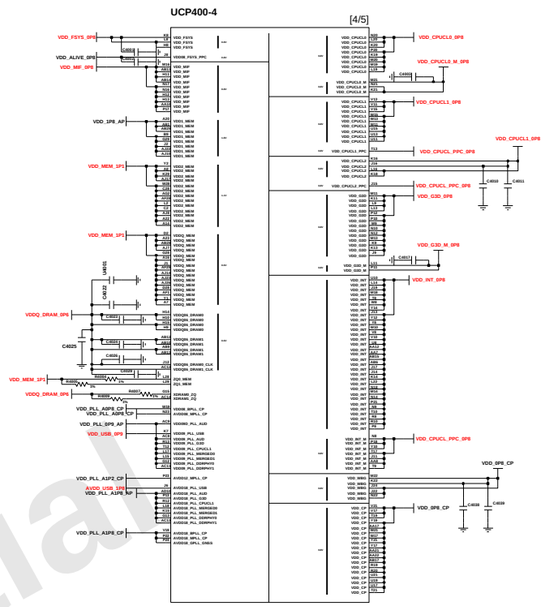

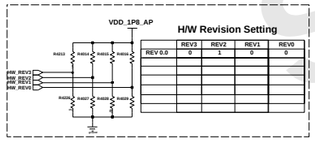

	REV3	REV2	REV1	REV0
REV 0.0	0	1	0	0

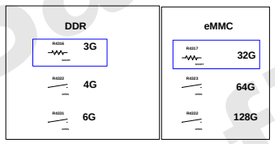

I2C Pull-up Register

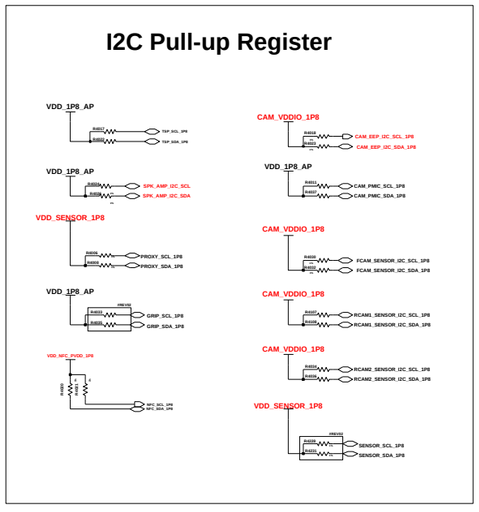

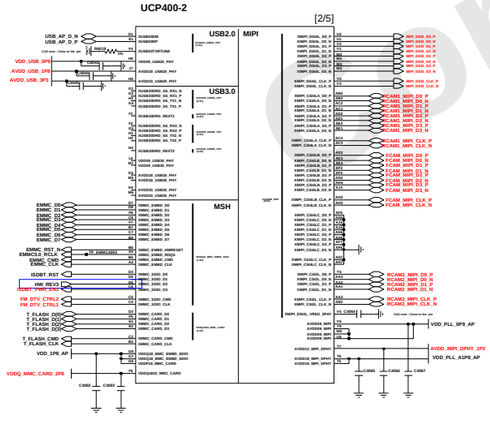

AP Decap

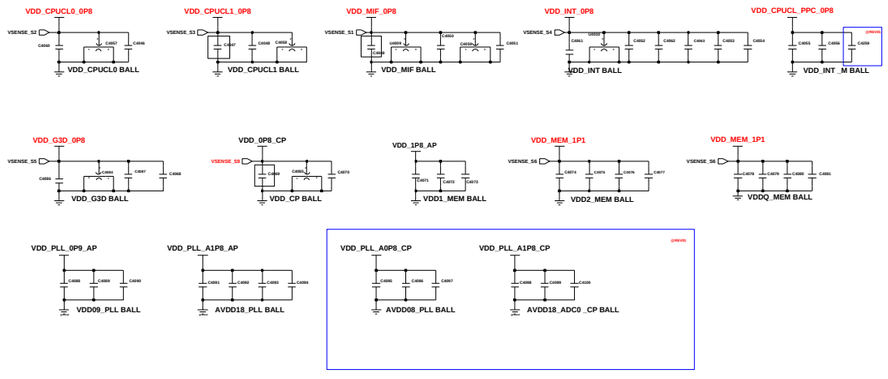

PCB JTAG

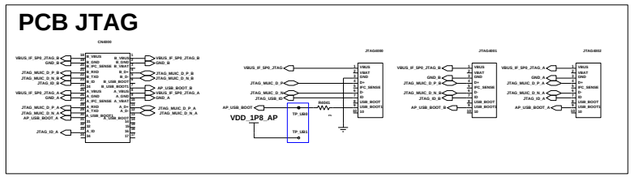

Engineer:	AP
Drawn by:	
SEC Code:	TITLE:
DOC CTRL Code:	2019_J9
MFG SHOP Code:	

Changed by:	Date Changed:	Time Changed:	QA Code:	REV:	Drawing Number:	Page:

Samsung Confidential

SAMSUNG CONFIDENTIAL
THIS DOCUMENT CONTAINS CONFIDENTIAL PROPRIETARY INFORMATION THAT IS SAMSUNG ELECTRONICS CO.'S PROPERTY. DO NOT COPY OR DISCLOSE TO ANYONE OTHERS EXCEPT AS AUTHORIZED BY SAMSUNG.

MAIN_PMIC

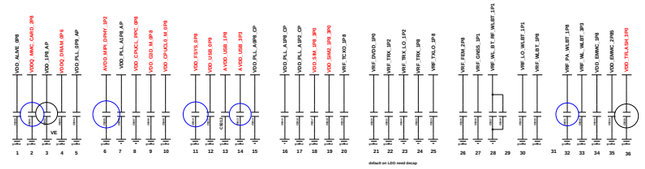

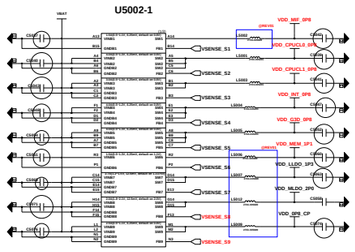

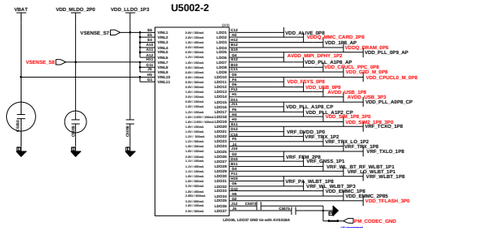

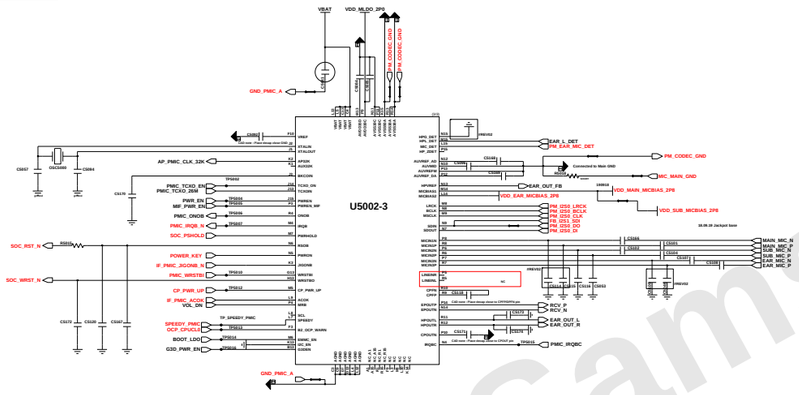

IF_PMIC

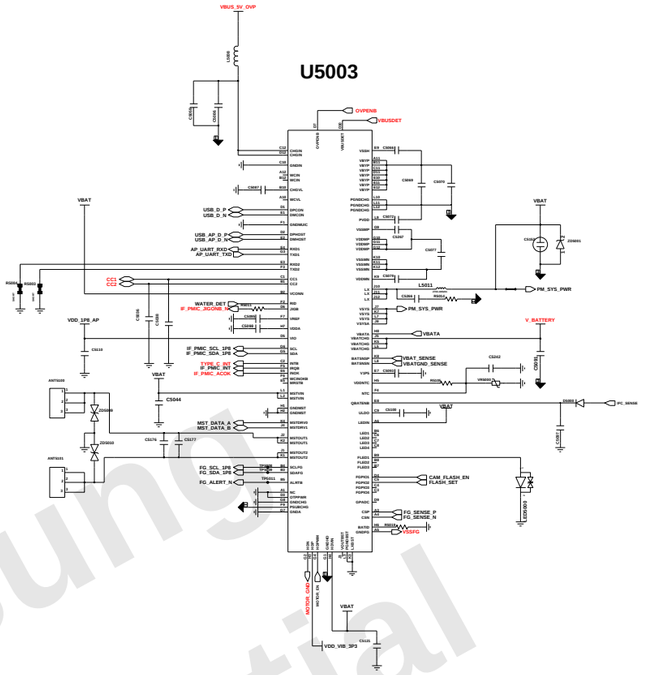

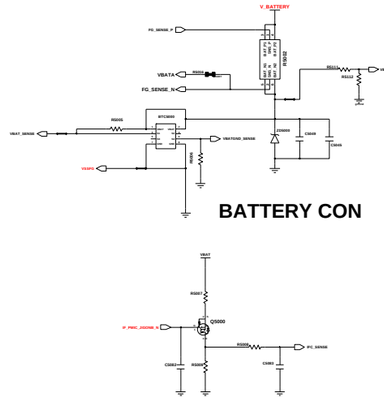

IF PMIC(S2MU106)

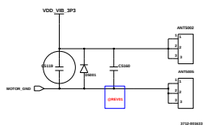

MOTOR

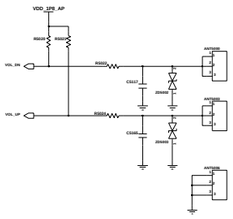

VOLUME KEY

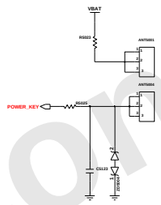

POWER KEY

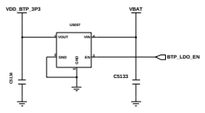

FPS PWR

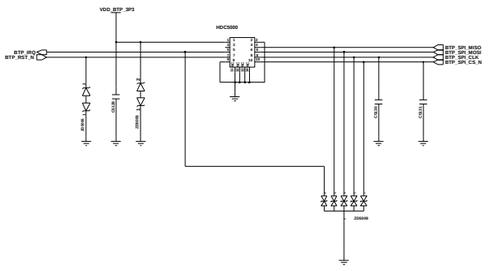

Finger Print Sensor

32GB eMMC 5.1

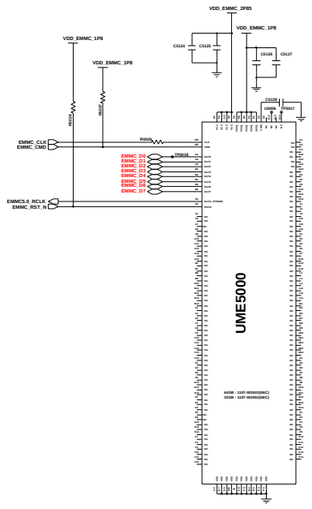

Engineer:	PMIC/IF PMIC/eMMC
SYSMAN No:	
PCB Date:	TITLE: 2019_J9
DDC CTRL Date:	
BPS 60GB Date:	
QA Date:	REV: Drawing Number:

Changed By | Date Changed | Time Changed

Samsung Confidential

SAMSUNG CONFIDENTIAL
THIS DOCUMENT CONTAINS CONFIDENTIAL & PROPRIETARY INFORMATION THAT IS SAMSUNG ELECTRONICS CO'S PROPERTY. DO NOT DISCLOSE TO OR DUPLICATE FOR OTHERS EXCEPT AS AUTHORIZED BY SAMSUNG.

AUDIO

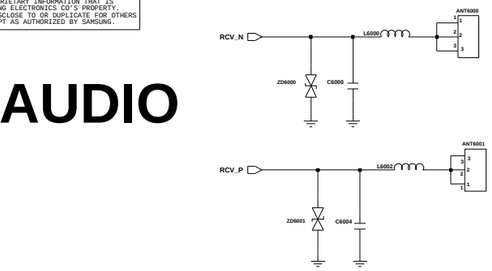

RCV CONTACT

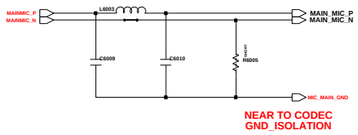

MAIN MIC

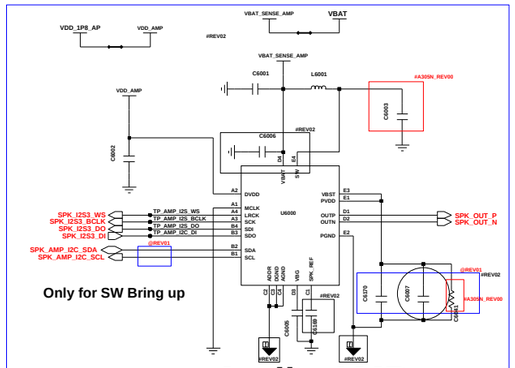

Audio AMP

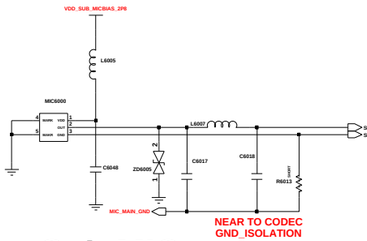

Sub MIC

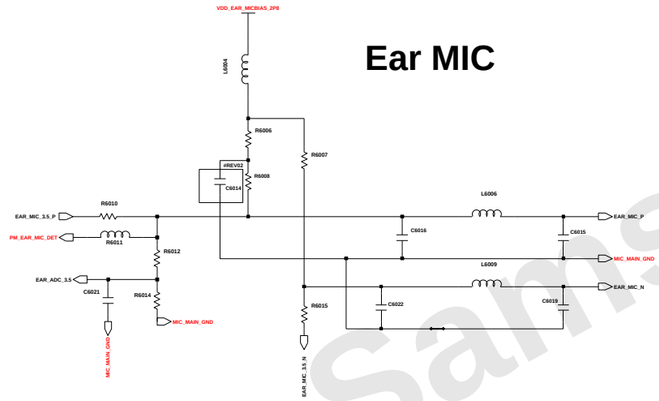

Ear MIC

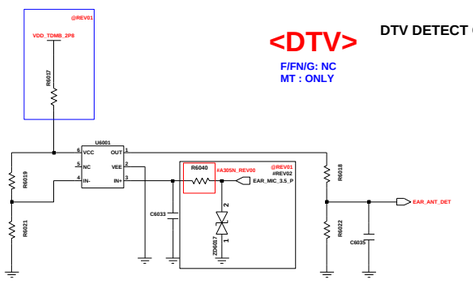

<DTV>

F/FN/G: NC
MT : ONLY

DTV DETECT OPEN

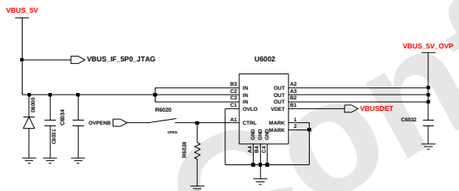

MAIN FPCB

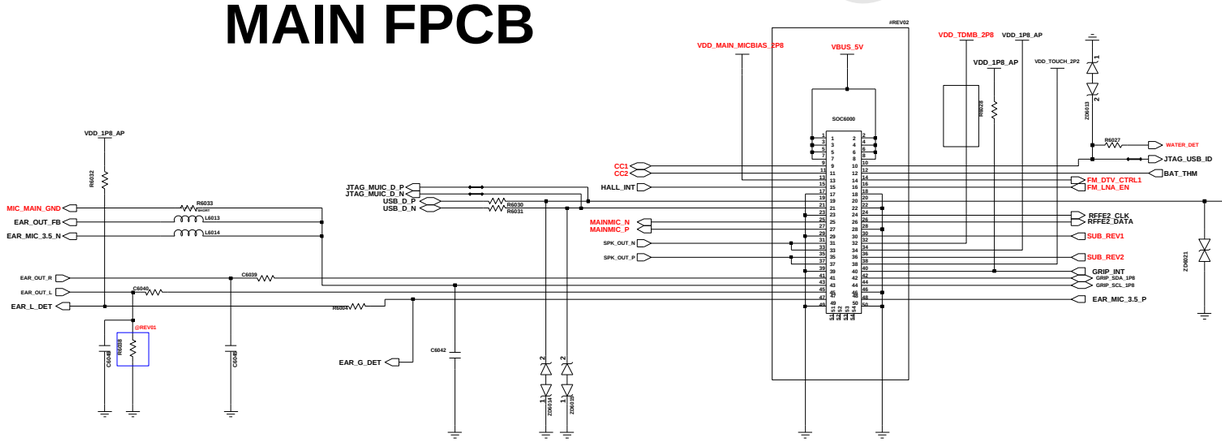

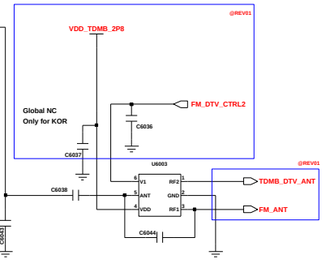

SIM & SD CARD (3IN3)

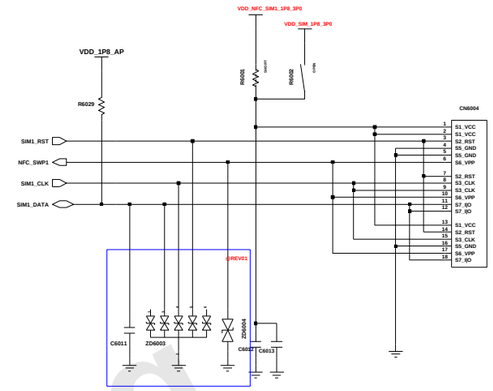

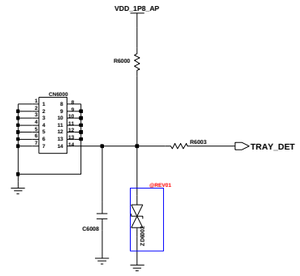

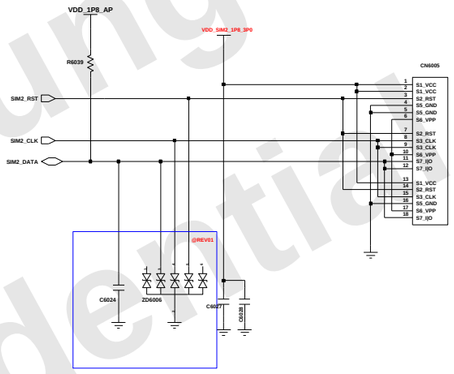

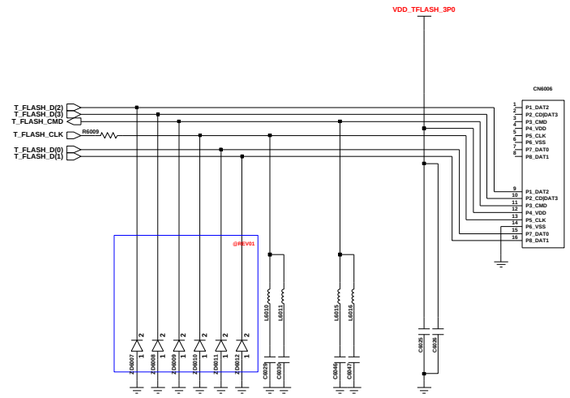

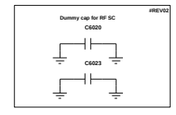

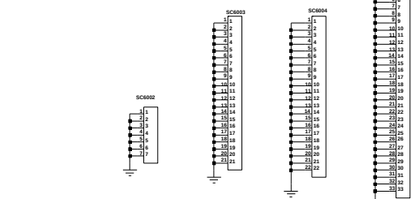

SHIELD CAN

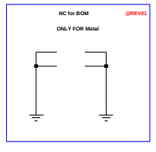

BOSS HOLE

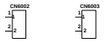

2D BARCODE

YN(AUS) R6034 SHORT
N(KOR/NFC) R6023 NC
ETC1 R6037 NC

	YN (AUS)	N (KOR)				ETC1	
R6034	O						
R6035							
R6023		O					
R6036							
R6037						O	

Changed by:	Date Changed:	Time Changed:	

Engineer:	AUDIO, SIM/SD, SHIELD CAN		
Drawn by:			
R&D CHK:	TITLE:	Size: A3	
DOC CTRL CHK:			
MFG ENGR CHK:			
QA CHK:	REV	Drawing Number:	Page: 6/7

Samsung Confidential

SAMSUNG CONFIDENTIAL
THIS DOCUMENT CONTAINS CONFIDENTIAL
& PROPRIETARY INFORMATION THAT IS
SAMSUNG ELECTRONICS CO'S PROPERTY.
DO NOT DISCLOSE TO OR DUPLICATE FOR OTHERS
EXCEPT AS AUTHORIZED BY SAMSUNG.

CAMERA_PART

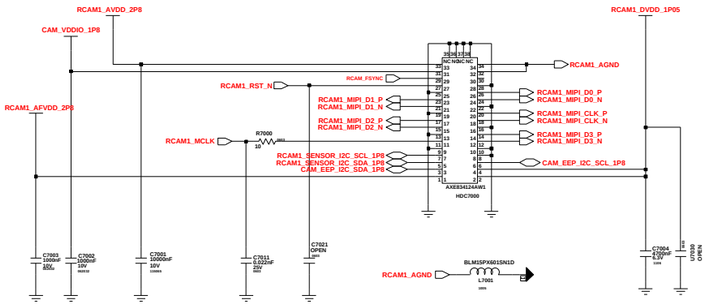

RCAM1_16M CAMERA(34PIN)

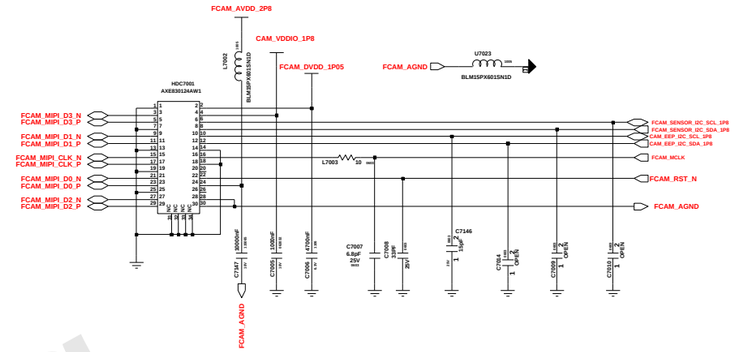

FRONT_16M CAMERA(30PIN)

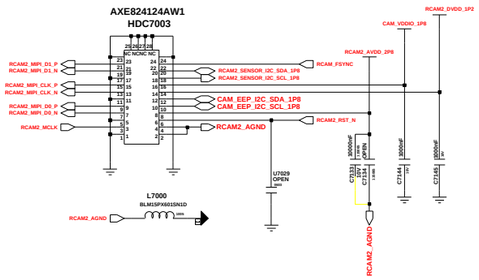

RCAM2_5M CAMERA(24PIN)_S5K5E9

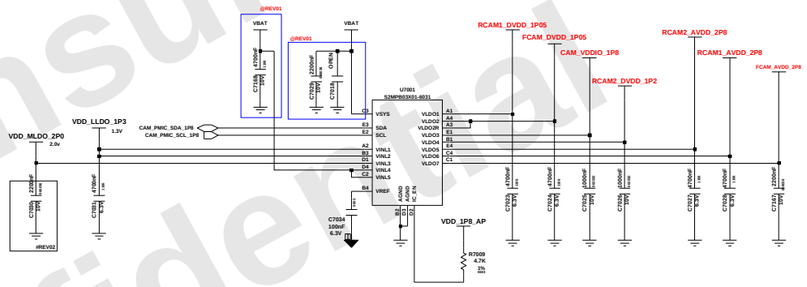

CAM PMIC

OCTA LDO

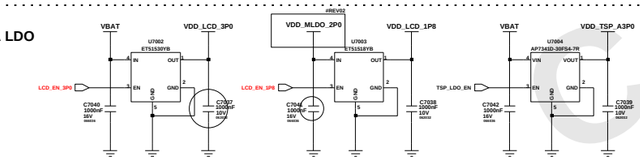

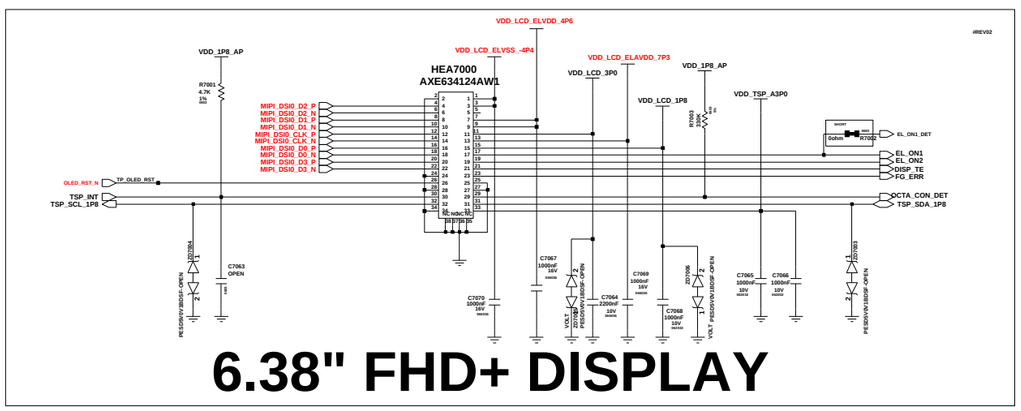

6.38" FHD+ DISPLAY

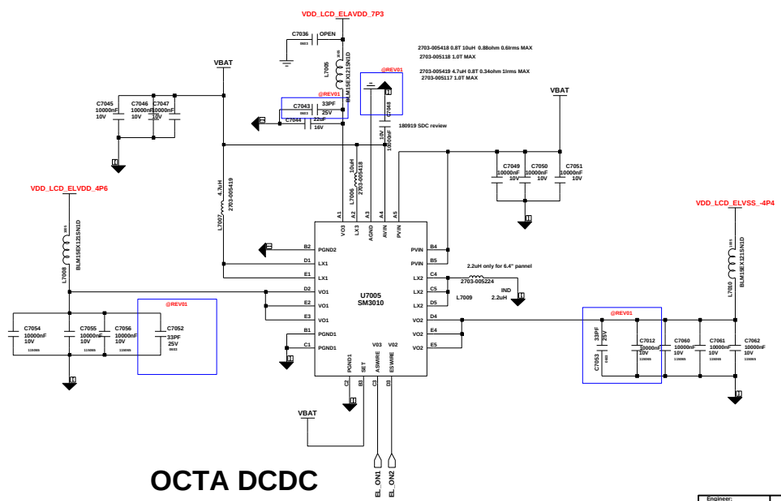

OCTA DCDC

Engineer:	CAMERA, DISPLAY
Drawn by:	
R&D CHK:	TITLE: 2019_J9
DOC CTRL CHK:	Size: A1
MFG ENGR CHK:	
QA CHK:	REV: Drawing Number: Page: 3/3

Changed by: Date Changed: Time Changed:

Samsung Confidential

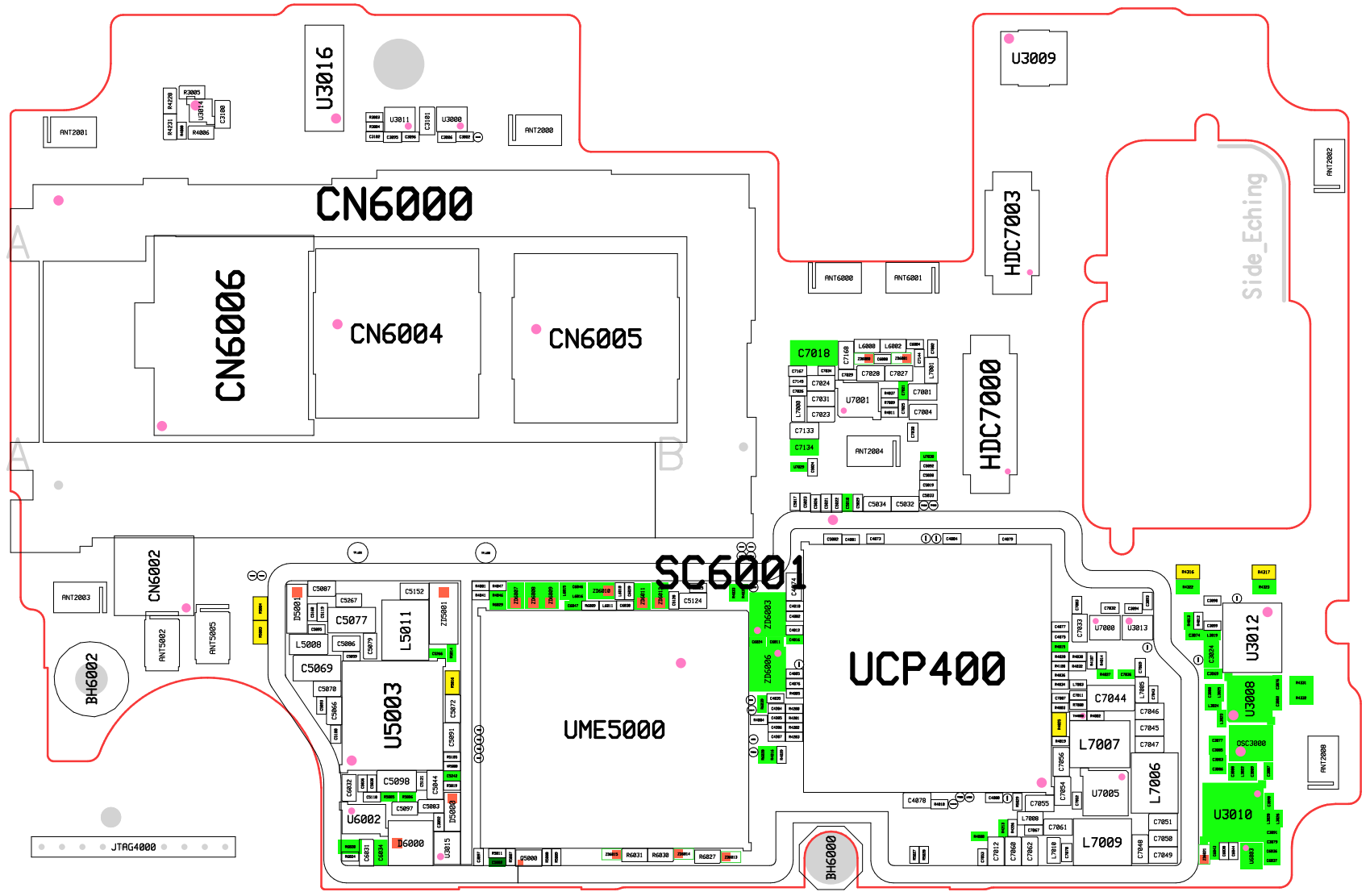
U3016
U3009
CN6000
CN6006
CN6004
CN6005
HDC7003
HDC7000
Side_Eching
SC6001
UCP400
UME5000
U5003
CN6002
BH6002
BH6000
U3012
U3008
U3010
L7007
L7006
L7009
U7001
U7000
U3013
U7005
U6002
D6000
JTAG4000
ANT2001
ANT2000
ANT2002
ANT2003
ANT2004
ANT2008
ANT5002
ANT5005
ANT6000
ANT6001
A
B

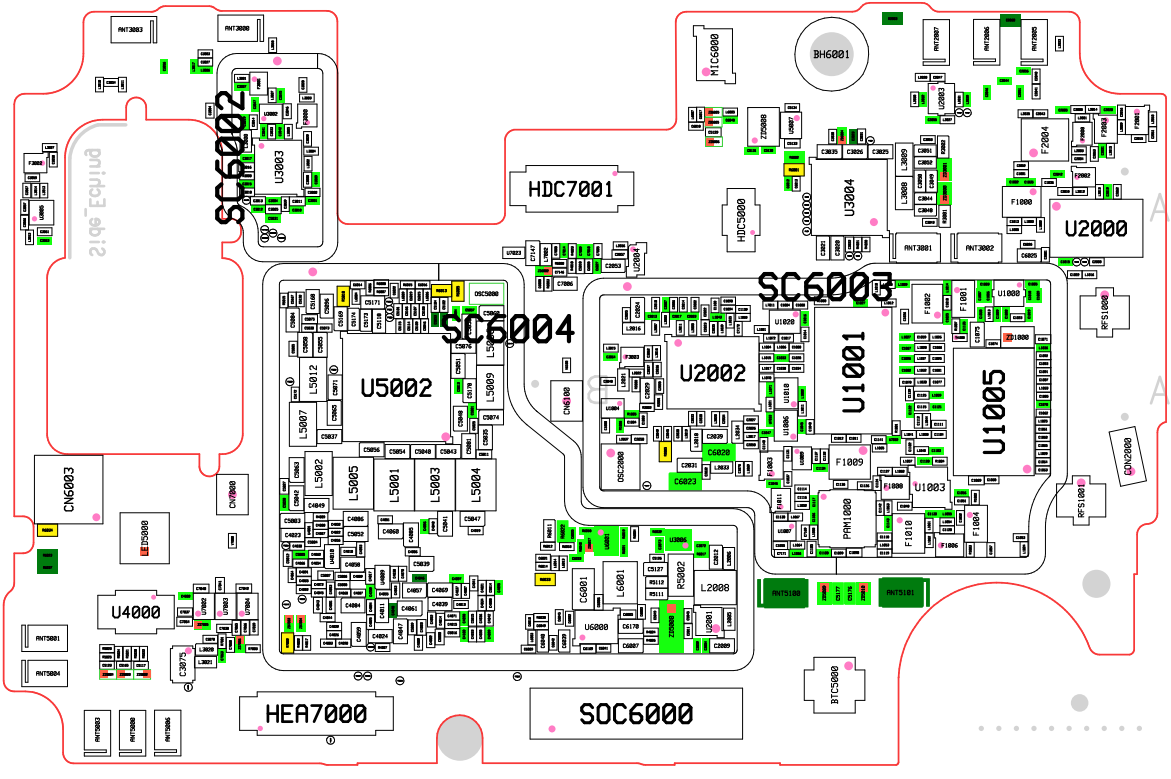
SC6002
SC6004
SC6003
HDC7001
U5002
U2002
U1001
U1005
U2000
U3004
U3003
U4000
HEA7000
SOC6000
CN6003
CN6100
CN2000
MIC6000
BH6001
HDC5000
BTC5000
RFS1000
RFS1001
ANT3001
ANT3002
ANT3003
ANT3000
ANT5100
ANT5101
ANT5001
ANT5004
ANT3083
ANT3088
ANT3086
ANT3087
ANT3085
ANT3084
PMM1000
OSC5000
OSC2000
U6000
U6001
U2001
U1003
U1004
U1006
U1007
U1008
U1009
U1010
U1020
U1002
U3003
U3000
U3001
U3002
U3005
U3006
U3007
U3008
U3009
U3010
U3011
U3012
U3013
U3014
U3015
U3016
U3017
U3018
U3019
U3020
U3021
U3022
U3023
U3024
U3025
U3026
U3027
U3028
U3029
U3030
U3031
U3032
U3033
U3034
U3035
U3036
U3037
U3038
U3039
U3040
U3041
U3042
U3043
U3044